Inverters

FR-D700 Series....490
FR-D800 Series....496
FR-E800 Series....503
FR-F800-E Series....523
FR-A770 Series....531
FR-A701 Series....535
FR-A800-E Series....539
FR-A800-GF Series....554
FR-A800 Plus....556
FR-A800-LC....560
FR-A842-P....562
FR-A846 – NEMA 12 Version of FR-A800....564
General Options....565
EM-A Sensorless Servo Motor for FR-800 Series....570

FR-D700 Series

Low-cost micro VFD with Mitsubishi Electric quality.

5 YEAR WARRANTY

- **Simple to use:** The FR-D700 is perfect for a wide range of applications
- **Simple to set-up:** The integrated digital setting dial with display makes configuration fast and easy
- **Simple operation:** Control remotely or with the built-in digital control
- **Simple to choose:** Low cost and with Mitsubishi Electric quality ensuring long operation life
- **Capacity:** From 1/8 to 10 HP
- **Safety stop function:** Meets EN954-1 Category 3 and IEC60204-1 Stop Category 0
- Integrated brake chopper circuit
- **MODBUS RTU:** Included as standard via the RJ45 port
- 150% torque at 1Hz and 200% torque at 3Hz using General-purpose Magnetic Flux Vector Control
- **Optimum Excitation Control:** For increased energy savings when motor is not loaded
- **Frequency search function:** Catch a spinning load
- **Dancer control:** Allows position signal to control roll tension
- **Password function:** For parameter setting protection
- **Internal diagnostics function:** For monitoring status of critical components
- RoHS compliant
- 10-year maintenance free design



FR- ❶ - ❷ -NA

❶ Voltage

Symbol	Voltage Class
D710W	1-phase 110V class
D720S	1-phase 240V class
D720	3-phase 240V class
D740	3-phase 480V class

❷ Capacity

Symbol
Inverter capacity amperage / 10 (008 = 0.8A output)

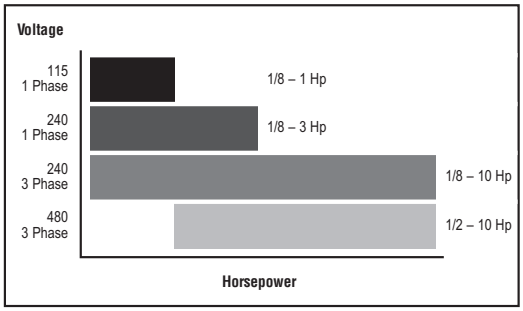

FR-D700 Series

Rating (CT & VT)		IP20 Open Chassis	Dimensions in inches (mm)			Weight lbs (kg)	Stocked Item
HP	Rated Amps	Model Number	Height	Width	Depth		
1-Phase 100~120VAC Input / 3-Phase 200~240VAC Output							
1/8	0.8	**FR-D710W-008-NA**	5.0 (128)	2.7 (68)	3.2 (80.5)	1.1 (0.5)	S
1/4	1.4	**FR-D710W-014-NA**	5.0 (128)	2.7 (68)	4.4 (110.5)	1.3 (0.6)	S
1/2	2.5	**FR-D710W-025-NA**	5.0 (128)	2.7 (68)	5.6 (142.5)	2.0 (0.9)	S
1	4.2	**FR-D710W-042-NA**	5.0 (128)	4.3 (108)	5.9 (149.5)	3.1 (1.4)	S
1-Phase 200~240VAC Input / 3-Phase 200~240VAC Output							
1/8	0.8	**FR-D720S-008-NA**	5.0 (128)	2.7 (68)	3.2 (80.5)	1.1 (0.5)	S
1/4	1.4	**FR-D720S-014-NA**	5.0 (128)	2.7 (68)	3.2 (80.5)	1.3 (0.6)	S
1/2	2.5	**FR-D720S-025-NA**	5.0 (128)	2.7 (68)	5.6 (142.5)	2.0 (0.9)	S
1	4.2	**FR-D720S-042-NA**	5.0 (128)	2.7 (68)	6.5 (162.5)	2.5 (1.1)	S
2	7	**FR-D720S-070-NA**	5.0 (128)	4.3 (108)	6.2 (155.5)	3.3 (1.5)	S
3	10	**FR-D720S-100-NA**	5.9 (150)	5.5 (140)	5.7 (145)	4.4 (2.0)	S
3-Phase 200~240VAC Input & Output							
1/8	0.8	**FR-D720-008-NA**	5.0 (128)	2.7 (68)	3.2 (80.5)	1.1 (0.5)	S
1/4	1.4	**FR-D720-014-NA**	5.0 (128)	2.7 (68)	3.2 (80.5)	1.1 (0.5)	S
1/2	2.5	**FR-D720-025-NA**	5.0 (128)	2.7 (68)	4.5 (112.5)	1.8 (0.8)	S
1	4.2	**FR-D720-042-NA**	5.0 (128)	2.7 (68)	5.3 (132.5)	2.2 (1.0)	S
2	7	**FR-D720-070-NA**	5.0 (128)	4.3 (108)	5.4 (135.5)	3.1 (1.4)	S
3	10	**FR-D720-100-NA**	5.0 (128)	4.3 (108)	5.4 (135.5)	3.1 (1.4)	S
5	16.5	**FR-D720-165-NA**	5.0 (128)	6.7 (170)	5.6 (142.5)	4.0 (1.8)	S
7 1/2	23.8	**FR-D720-238-NA**	5.9 (150)	8.7 (220)	6.1 (155)	8.0 (3.6)	S
10	31.8	**FR-D720-318-NA**	5.9 (150)	8.7 (220)	6.1 (155)	8.0 (3.6)	S
3-Phase 380~480VAC Input & Output							
1/2	1.2	**FR-D740-012-NA**	5.0 (128)	4.3 (108)	5.1 (129.5)	2.9 (1.3)	S
1	2.2	**FR-D740-022-NA**	5.0 (128)	4.3 (108)	5.1 (129.5)	2.9 (1.3)	S
2	3.6	**FR-D740-036-NA**	5.0 (128)	4.3 (108)	5.4 (135.5)	3.1 (1.4)	S
3	5	**FR-D740-050-NA**	5.0 (128)	4.3 (108)	6.2 (155.5)	3.3 (1.5)	S
5	8	**FR-D740-080-NA**	5.0 (128)	4.3 (108)	6.6 (165.5)	3.3 (1.5)	S
7 1/2	12	**FR-D740-120-NA**	5.9 (150)	8.7 (220)	6.1 (155)	7.3 (3.3)	S
10	16	**FR-D740-160-NA**	5.9 (150)	8.7 (220)	6.1 (155)	7.3 (3.3)	S

FR-D700 General Specifications

Control Specifications	Control Method			Soft-PWM control/high carrier frequency PWM control (V/F control, General-purpose magnetic flux vector control, Optimum excitation control can be selected)
	Output Frequency Range			0.2 to 400Hz
	Frequency Setting Resolution		Analog Input	0.06Hz/60Hz (terminal2, 4: 0 to 10V/10bit) 0.12Hz/60Hz (terminal2, 4: 0 to 5V/9bit) 0.06Hz/60Hz (terminal4: 0 to 20mA/10bit)
			Digital Input	0.01Hz
	Frequency Accuracy		Analog Input	Within ±1% of the max. output frequency (25°C ±10°C)
			Digital Input	Within 0.01% of the set output frequency
	Voltage/Frequency Characteristics			Base frequency can be set from 0 to 400Hz. Constant torque/variable torque pattern can be selected
	Starting Torque			150% or more (at 1Hz) when General-purpose magnetic flux vector control and slip compensation is set
	Torque Boost			Manual torque boost
	Accel. /Decel. Time Setting			0.01 to 3600s (acceleration and deceleration can be set individually), linear or S-pattern acceleration/deceleration mode can be selected.
	Braking Torque		Regeneration (*1)	FR-D720-008 and 014, FR-D720S-008 and 014, FR-D710W-008 and 014 ... 150%, FR-D720-025 and 042, FR-D740-012 and 022, FR-D720S-025 and 042, FR-D710W-025 and 042 ... 100%, FR-D720-070, FR-D740-036, FR-D720S-070 ... 50%, FR-D720-100 or more, FR-D740-050 or more, FR-D720S-100 ... 20%
			DC Injection Brake	Operation frequency (0 to 120Hz), operation time (0 to 10s), operation voltage (0 to 30%) variable
	Stall Prevention Operation Level			Operation current level can be set (0 to 200% adjustable), whether to use the function or not can be selected
Operation Specifications	Frequency Setting Signal		Analog Input	Two points Terminal 2: 0 to 10V, 0 to 5V can be selected Terminal 4: 0 to 10V, 0 to 5V, 4 to 20mA can be selected
			Digital Input	Entered from operation panel and parameter unit. Frequency setting increments is selectable.
	Start Signal			Forward and reverse rotation or start signal automatic self-holding input (3-wire input) can be selected.
	Input Signal			Five points. You can select from among multi-speed selection, remote setting, second function selection, terminal 4 input selection, JOG operation selection, PID control valid terminal, external thermal input, PU-external operation switchover, V/F switchover, output stop, start self-holding selection, forward rotation, reverse rotation command, inverter reset, PU-NET operation switchover, external-NET operation switchover, command source switchover, inverter operation enable signal, and PU operation external interlock
	Operational Functions			Maximum/minimum frequency setting, frequency jump operation, external thermal relay input selection, automatic restart after instantaneous power failure operation, forward/reverse rotation prevention, remote setting, second function, multi-speed operation, regeneration avoidance, slip compensation, operation mode selection, offline auto tuning function, PID control, computer link operation (RS-485), Optimum excitation control, power failure stop, speed smoothing control, MODBUS-RTU
	Output Signal	Output Signal Points	Open Collector Output	One point
			Relay Output	One point
		Operating Status		You can select from among inverter operation, up-to-frequency, overload alarm, output frequency detection, regenerative brake prealarm, electronic thermal relay function prealarm, inverter operation ready, output current detection, zero current detection, PID lower limit, PID upper limit, PID forward/reverse rotation output, fan alarm (*3), heatsink overheat pre-alarm, deceleration at an instantaneous power failure, PID control activated, PID output interruption, during retry, life alarm, current average value monitor, remote output, alarm output, fault output, fault output 3, and maintenance timer alarm
		For Meter Output Points	Analog Output	0 to 10VDC: one point
		For Meter		You can select from among output frequency, output current (steady), output voltage, frequency setting, converter output voltage, regenerative brake duty, electronic thermal relay function load factor, output current peak value, converter output voltage peak value, reference voltage output, motor load factor, PID set point, PID measured value, output power, PID deviation, motor thermal load factor, inverter thermal load factor 0 to 10VDC
Indication	Operation Panel Parameter Unit (FR-PU07)		Operating Status	You can select from among output frequency, output current (steady), output voltage, frequency setting, cumulative energization time, actual operation time, converter output voltage, regenerative brake duty, electronic thermal relay function load factor, output current peak value, converter output voltage peak value, motor load factor, PID set point, PID measured value, PID deviation, inverter I/O terminal monitor, output power, cumulative power, motor thermal load factor, inverter thermal load factor, PTC thermistor resistance.
			Fault Definition	Fault definition is displayed when the fault occurs and the past 8 fault definitions (output voltage/current/frequency/cumulative energization time right before the fault occurs) are stored
	Additional Display By The Parameter Unit (FR-PU07) Only		Operating Status	Not used
			Fault Definition	Output voltage/current/frequency/cumulative energization time immediately before the fault occurs
			Interactive Guidance	Function (help) for operation guide
Protective Functions				Overcurrent during acceleration, overcurrent during constant speed, overcurrent during deceleration, overvoltage during acceleration, overvoltage during constant speed, overvoltage during deceleration, inverter protection thermal operation, motor protection thermal operation, heatsink overheat, input phase loss (*5, *6), output side earth (ground) fault overcurrent at start (*5), output phase loss, external thermal relay operation (*5), PTC thermistor operation (*5), parameter error, PU disconnection, retry count excess (*5), CPU fault, brake transistor alarm, inrush resistance overheat, analog input error, stall prevention operation, output current detection value exceeded (*5), safety circuit fault
Warning Functions				Fan alarm (*3), overcurrent stall prevention, overvoltage stall prevention, PU stop, parameter write error, regenerative brake prealarm (*5), electronic thermal relay function prealarm, maintenance output (*5), undervoltage, operation panel lock, password locked, inverter reset, safety stop
Environment	Surrounding Air Temperature			-10°C to +50°C (14°F to 122°F) (non-freezing) (*4)
	Ambient Humidity			90%RH maximum (non-condensing)
	Storage Temperature (*2)			-20°C to +65°C (-4°F to 149°F)
	Atmosphere			Indoors (without corrosive gas, flammable gas, oil mist, dust and dirt, etc.)
	Altitude/Vibration			Maximum 1000m (3280.80 feet) above sea level, 5.9m/s² or less at 10 to 55Hz (directions of X, Y, Z axes)

Notes:

1. The braking torque indicated is a short-duration average torque (which varies with motor loss) when the motor alone is decelerated from 60Hz in the shortest time and is not a continuous regenerative torque. When the motor is decelerated from a frequency higher than the base frequency, the average deceleration torque will reduce. Since the inverter does not contain a brake resistor, use the optional brake resistor when regenerative energy is large. A brake unit (FR-BU2) may also be used.
2. Temperatures applicable for a short time, e.g. in transit.
3. As the FR-D720-042 or less, FR-D740-022 or less, FR-D720S-042 or less, FR-D710W-042 or less are not provided with the cooling fan, this alarm does not function.
4. When using the inverters at the surrounding air temperature of 40°C (104°F) or less, the inverters can be installed closely attached (0cm clearance).
5. This protective function does not function in the initial status.
6. This protective function is available with the three-phase power input specification model only.

FR-D700 Series Terminal Connection Diagram

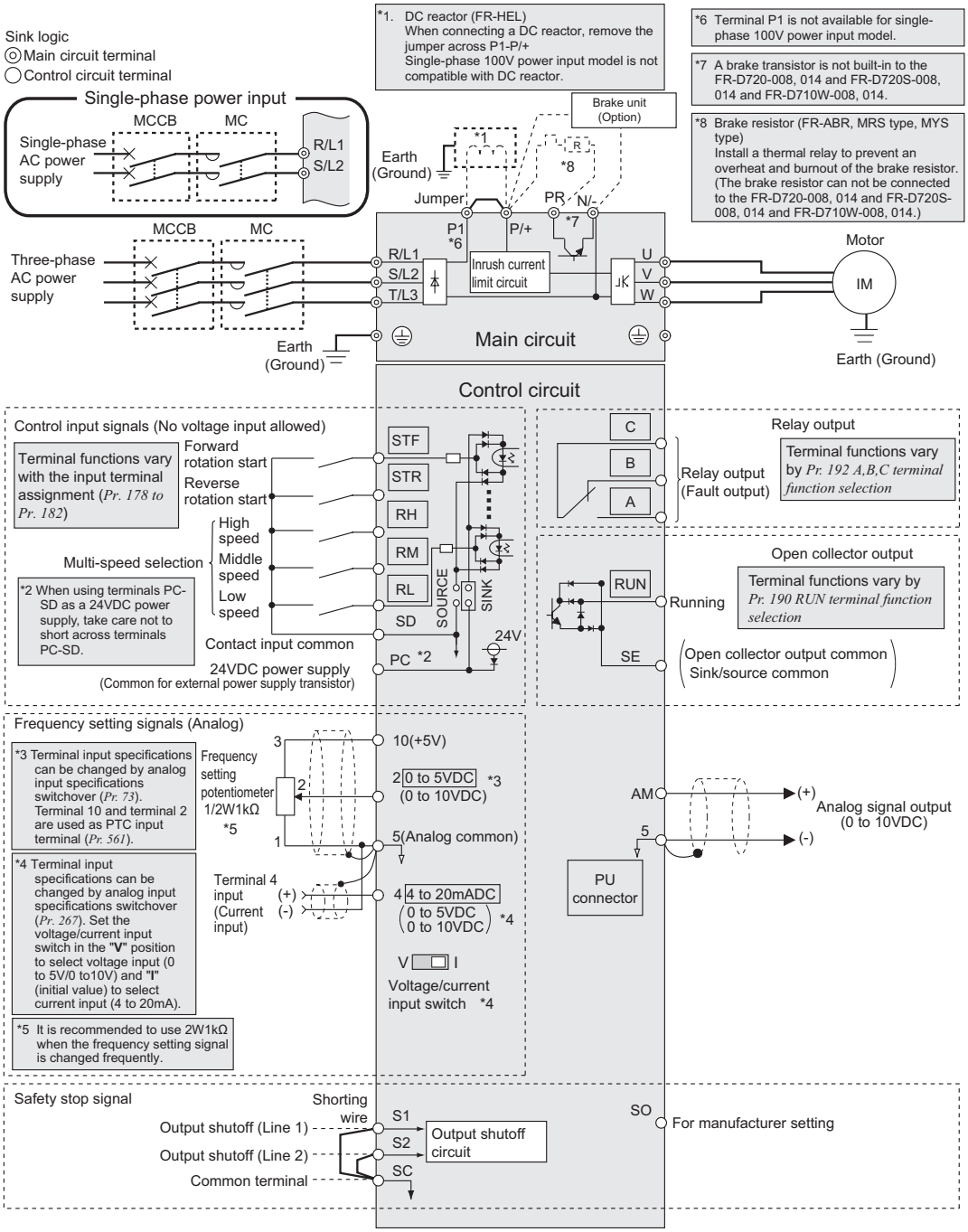

Terminal Block Layout

Recommended wire size:
0.3mm² 0.75mm²

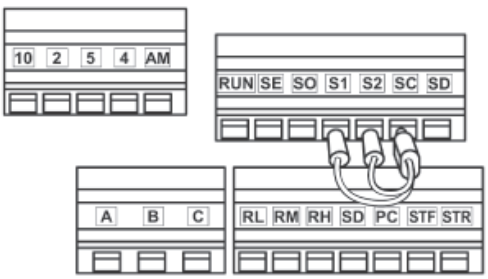

FR-D700 Series Options

Model Number	Description	Notes	Stocked Item
FR-PU07	Alpha-Numeric multi-language keypad		S
FR-PU07BB	Battery back-up version of FR-PU07		S
D700-PT1	Adapter unit required for FR-PU07BB		S
FR-PA07	Panel mount basic keypad		S
FR-CONFIGURATOR	Programming and diagnostic software		S
SC-FRPC	Serial communications cable		S
FR-CB201	Remote cable for connecting keypad	1 meter cable	S
FR-CB203	Remote cable for connecting keypad	3 meter cable	S
FR-CB205	Remote cable for connecting keypad	5 meter cable	S
FR-ABR-_ _ K	External braking resistor		S
FR-RJ45-HUB4	Serial Network Hub - 2 Stations		-
FR-RJ45-HUB10	Serial Network Hub - 8 Stations		-
FR-RJ45-TR	Terminating Resistor for FR-RJ45-HUB		-

Note: _ _ represents KW rating.

Input Radio Noise Filter

This filter is connected to the input of the drive and helps to reduce radiated noise in the radio frequencies.

Drive Voltage	Kit Model Number	Leakage Current (mA)	Dimensions mm (in)			Stocked Item
			L	W	D	
208 - 230	**FR-BIF**	4	58 (2.3)	44 (1.8)	42 (1.7)	S
460	**FR-BIF-H**	4	58 (2.3)	44 (1.8)	42 (1.7)	-

Line Noise Filter

Provides a toroid for line noise reduction.

Drive HP	Kit Model Number	Dimensions mm (in)			Stocked Item
		L	W	D	
0.5 - 5	**FR-BSF01**	110 (4.33)	22.5 (0.89)	65 (2.56)	S
0.5 - 75	**FR-BLF**	180 (7.07)	31.5 (1.24)	83 (3.27)	S

FR-D700 EMC Filters

This attachment allows the VFD to be mounted onto the filter.

Model Number	Drive Model	Stocked Item
FFR-CS-050-14A-SF1	D720S-008 to 042	-
FFR-CS-080-20A-SF1	D720S-070	-
FFR-CS-110-26A-SF1	D720S-100	-
FFR-CSH-036-8A-SF1	D740-012 to 036	-
FFR-CSH-080-16ASF1	D740-050 to 080	-
FFR-MSH-170-30ASF1	D740-120 to 160	-

DIN Rail Mounting Attachment

This attachment allows the D700 Series inverter to mount on a 35mm DIN rail.

Model Number	Drive Model				Stocked Item
	D710W	D720S	D720	D740	
FR-UDA01	008-025	008-042	008-042	-	S
FR-UDA02	042	070	070-100	012-080	S
FR-UDA03	-	-	165	-	-

Brake Resistors

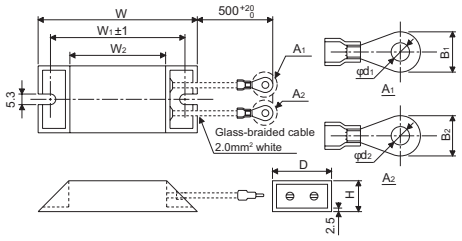

Brake Resistor Model	Dimensions (mm)				
	W	W1	W2	D	H
200V Class					
FR-ABR-0.4K	140	125	100	40	21
FR-ABR-0.75K	215	200	175	40	21
FR-ABR-2.2K	240	225	200	50	26
FR-ABR-3.7K	215	200	175	61	33
FR-ABR-5.5K	335	320	295	61	33
FR-ABR-7.5K	400	385	360	80	40
FR-ABR-11K	400	385	360	100	50
FR-ABR-15K (*1)	300	285	260	100	50
400V Class					
FR-ABR-H0.4K	115	100	75	40	21
FR-ABR-H0.75K	140	125	100	40	21
FR-ABR-H1.5K	215	200	175	40	21
FR-ABR-H2.2K	240	225	200	50	26
FR-ABR-H3.7K	215	200	175	61	33
FR-ABR-H5.5K	335	320	295	61	33
FR-ABR-H7.5K	400	385	360	80	40
FR-ABR-H11K	400	385	360	100	50
FR-ABR-H15K (*2)	300	285	260	100	50

Notes:
1. For the 15K, connect the two supplied resistors (18 ohms) in parallel
2. For the H15K, connect the two supplied resistors (18 ohms) in series.

FR-D700 Conduit Kits

Kit Model Number	Description	Stocked Item
CK-5567	Conduit Kit for D720S-100	S
CK-27	Conduit Kit for D720S-042	S
CK-87	Conduit Kit for D720-238/318	S
CK-43-S	Conduit Kit for D720-070/100 / D740-012/036	S
CK-43-T	Conduit Kit for D710W-042 / D740-050/080	S

FR-D700 Dynamic Braking

All Mitsubishi Electric VFDs have some inherent braking capability. During controlled deceleration, motor regenerative losses are dissipated in the motor, wire, and VFD circuitry. The built-in DC injection braking allows for low-speed braking and stopping.

When the above capabilities are inadequate for an application, it is necessary to add a power transistor brake unit and resistor unit in series across the DC bus. Motor regeneration causes the DC bus voltage to increase, and when the voltage exceeds a specified threshold, the transistor turns on to pass current through the resistor. Motor kinetic energy is converted to heat energy. VFD overcurrent and overvoltage protective circuits are active at all times and will fault-trip the VFD if the brake size is inadequate.

Two main factors must be considered when sizing the brake, the effective duty cycle (%ED) and the short time duty rating. The effective duty cycle is increased when an external resistor is added. It is preferable to profile the effective duty cycle of the units of time. With this information, the short time duty is known and the %ED can be calculated, as shown in the below example.

%ED = Braking time / total time for complete operating cycle *100

Example: Complete cycle is:
5 sec: Acceleration time to reach set speed
60 sec: Run time at set speed
3 sec: Deceleration time to come to a complete stop
12 sec: Time period motor remains stopped

%ED = 3 / (5 + 60 + 3 + 12) * 100 = 3.6%
The tables shown assume 100% brake torque, when brake torque is represented by its percentage to the rated torque of the applied motor.
Torque (kg.m) = 974 * Power (kW) / Speed (rpm).

240VAC Dynamic Braking Resistor at 100% Braking Torque

Resistor Kit Model Number	Weight kg (lbs)	Resistance (Ohms)	Continuous Permissible Power (W)	Motor (Hp)	Drive Model		Stocked Item
					D710W and D720(S)	% ED	
FR-ABR-0.4K	0.2 (0.5)	200	60	1/2	025	10%	S
FR-ABR-0.75K	0.4 (0.9)	100	80	1	042	10%	S
FR-ABR-2.2K	0.5 (1.1)	60	120	2 and 3	070 / 100	10%	S
FR-ABR-3.7K	0.8 (1.8)	40	155	5	165	10%	S
FR-ABR-5.5K	1.3 (2.9)	25	185	7 1/2	238	10%	S
FR-ABR-7.5K	2.2 (4.9)	20	340	10	318	10%	S

480VAC Dynamic Braking Resistor at 100% Braking Torque

Resistor Kit Model Number	Weight kg (lbs)	Resistance (Ohms)	Continuous Permissible Power (W)	Motor (Hp)	Drive Model		Stocked Item
					D740	% ED	
FR-ABR-H0.4K	0.2 (0.5)	1200	45	1/2	012	10%	S
FR-ABR-H0.75K	0.2 (0.5)	700	75	1	022	10%	S
FR-ABR-H1.5K	0.4 (0.9)	350	115	2	036	10%	S
FR-ABR-H2.2K	0.5 (1.1)	250	120	3	050	10%	S
FR-ABR-H3.7K	0.8 (1.8)	150	155	5	080	10%	S
FR-ABR-H5.5K	1.3 (2.9)	110	185	7 1/2	120	10%	S
FR-ABR-H7.5K	2.2 (4.9)	75	340	10	160	10%	S

FR-D700 Heatsink Extension Kits

Kit Model Number	Model Number				Stocked Item
	FR-D710W-	FR-D720S-	FR-D720-	FR-D740-	
FR-E7CN-02	025	025	025	-	S
FR-E7CN-03	-	042	042	-	S
FR-E7CN-04	-	070	070/100	036 to 080	S
FR-E7CN-06	-	100	-	-	S
FR-E7CN-07	-	-	165	-	S
FR-E7CN-08	042	-	238/318	120/160	S
FR-E7CN-11	-	-	-	012/022	-

FR-D700 Building Management Options

Network Type / Model		ETH-1000 (*2, *3)	XLTR-1000 (*2, *3)
Gateway Communication (*1)	BACnet®/IP	X	-
	EtherNet/IP™	X	-
	MODBUS® TCP	X	-
	PROFINET® IO	X	-
	BACnet® MS/TP	X	X
	Metasys® N2	X	X
Stocked Item		-	-

Notes:
1. For additional information, visit www.iccdesigns.com
2. Communication to multiple VFDs is possible
3. Mounted and powered external to VFD

FR-D700 Series Watt Loss and Efficiency Data

HP-CT	115VAC 1-Phase Input				240VAC 1-Phase Input				240VAC 3-Phase Input				480VAC 3-Phase Input			
	Model Number	Rated Watts	Watts Loss	Efficiency	Model Number	Rated Watts	Watts Loss	Efficiency	Model Number	Rated Watts	Watts Loss	Efficiency	Model Number	Rated Watts	Watts Loss	Efficiency
	FR-D710W-				FR-D720S-				FR-D720-				FR-D740-			
1/8	008	100	14	86%	008	100	14	86%	008	100	14	86%	-	-	-	-
1/4	015	200	20	90%	015	200	20	90%	014	200	20	90%	-	-	-	-
1/2	030	400	38	91%	030	400	32	92%	025	400	32	92%	012	400	40	90%
1	050	750	50	93%	050	750	50	93%	042	750	50	93%	022	750	55	93%
2	-	-	-	-	070	1500	80	95%	070	1500	80	95%	036	1500	90	94%
3	-	-	-	-	100	2200	110	95%	100	2200	100	95%	050	2200	100	95%
5	-	-	-	-	-	-	-	-	165	3700	160	96%	080	3700	180	95%
7.5	-	-	-	-	-	-	-	-	238	5500	270	95%	120	5500	240	96%
10	-	-	-	-	-	-	-	-	318	7500	360	95%	160	7500	280	96%

General Notes:
1. The amount of heat generated by the inverter is based on one inverter connected to one motor of the same capacity.
2. The amount of heat generated in the above table is the amount of heat generated when the inverter is operated at its rated current.
3. The amount of heat generated will decrease according to the motor load and usage (duty).

FR-D700 Standby Power

HP-CT	115VAC 1-Phase Input			240VAC 1-Phase Input			240VAC 3-Phase Input			480VAC 3-Phase Input		
	Model Number	Stand-By Power Consumption		Model Number	Stand-By Power Consumption		Model Number	Stand-By Power Consumption		Model Number	Stand-By Power Consumption	
	FR-D710W-	Min	Max	FR-D720S-	Min	Max	FR-D720-	Min	Max	FR-D740-	Min	Max
1/8	008	5.5	10.5	008	5.5	10.5	008	5.5	10.5	-	-	-
1/4	015	5.5	10.5	015	5.5	10.5	014	5.5	10.5	-	-	-
1/2	030	5.5	10.5	030	5.5	10.5	025	5.5	10.5	012	10.5	15
1	050	5.5	10.5	050	5.5	10.5	042	5.5	10.5	022	10.5	15
2	-	-	-	070	5.5	14	070	5.5	14	036	10.5	17
3	-	-	-	100	5.5	14	100	5.5	14	050	10.5	17
5	-	-	-	-	-	-	165	6	15	080	10.5	17
7.5	-	-	-	-	-	-	238	13	22.5	120	13.5	22.5
10	-	-	-	-	-	-	318	13	22.5	160	13.5	22.5

General Notes:
1. The maximum is generated with PC terminal operating 100mA load, external parameter unit, and cooling fan operating.
2. The minimum is generated with no load on PC terminal, no external parameter unit, and cooling fan off.

FR-D800 Series

Cost-effective micro VFD backed by Mitsubishi Electric-grade reliability and performance.

5 YEAR WARRANTY

- **Capacity range:** From 1/8 HP to 10 HP
- **Easy to use:** Allows easy wiring and simple startup of networking
- **Eco-friendly:** Contributes to a decarbonized society by driving energy-saving motors
- **Ethernet communication:** Single-port multi-protocol models available
- **Induction motor and PM motor control:** Not only induction motors but synchronous PM motors are supported. Auto-tuning function automatically calculates motor parameters
- **Dual overload ratings:** Three-phase models are configurable for Normal Duty (ND) & Super Light Duty (SLD)
- **Advanced Optimum Excitation Control:** Increased energy savings is achieved by controlling the motor excitation current, so the efficiency of the motor is maximized
- **Functional safety:** Supports functional safety that complies with safety standards without incurring significant expenses (EN ISO 13849-1, PLd/Cat.3 and EN 61508, EN 61800-5-2, SIL2)
- **Side-by-side installation:** As an effective solution for downsizing the enclosure, it is possible to install multiple inverters in close contact. Users can select the most suitable layout for the intended installation area
- **Conformal coating:** Printed circuit board coating is provided for improved environmental resistance (conforming to IEC 60721-3-3:1994 3C2/3S2)
- **Predictive and preventive maintenance:** Enhanced monitoring functions for predictive maintenance and planned maintenance. Life diagnosis function provides early detection alert prior to component failure



FR-D8 ❶ 0 ❷ - ❸ ❹ -60

❶ Voltage

Symbol	Voltage Class
1	100V
2	200V
4	400V

❷ Input Power

Symbol	Voltage Specification
None	Three-phase
S	Single-phase 200V input
W	Single-phase 100V input (double voltage rectification)

❸ Capacity/Current

Symbol	Rated Capacity / Rated Current
0.1K to 7.5K 008 to 318	Inverter ND rated capacity (kW) 10 times of the inverter ND rated current (A)

❹ Communication

Symbol	Communication/Protocol Specification
None	Serial RS-485 (MODBUS RTU)
–EPA	Ethernet Protocol Group A (CC-Link IE TSN, CC-Link IE Field Network Basic, MODBUS/TCP, and EtherNet/IP)

FR-D800 Series Standard

Material Number	Model Number	HP (ND) (Default)	AMPS (ND) (Default)	HP (SLD)	AMPS (SLD) (*1)	Dimensions in Inches (mm)			Weight lbs (kg)
						Height	Width	Depth	
1-Phase 100–120VAC Input / 3-Phase 200–240VAC Output									
D810W-008-60	FR-D810W-0.1K-008-60	1/8	0.8	–	–	5.0 (128)	2.7 (68)	3.2 (80.5)	1.1 (0.5)
D810W-014-60	FR-D810W-0.2K-014-60	1/4	1.4	–	–	5.0 (128)	2.7 (68)	4.4 (110.5)	1.3 (0.6)
D810W-025-60	FR-D810W-0.4K-025-60	1/2	2.5	–	–	5.0 (128)	2.7 (68)	5.2 (132.5)	1.5 (0.7)
D810W-042-60	FR-D810W-0.75K-042-60	1	4.2	–	–	5.0 (128)	4.3 (108)	5.7 (145)	2.9 (1.3)
1-Phase 200–240V Input / 3-Phase 200–240VAC Output									
D820S-008-60	FR-D820S-0.1K-008-60	1/8	0.8	–	–	5.0 (128)	2.7 (68)	3.2 (80.5)	1.1 (0.5)
D820S-014-60	FR-D820S-0.2K-014-60	1/4	1.4	–	–	5.0 (128)	2.7 (68)	3.2 (80.5)	1.1 (0.5)
D820S-025-60	FR-D820S-0.4K-025-60	1/2	2.5	–	–	5.0 (128)	2.7 (68)	5.2 (132.5)	1.5 (0.7)
D820S-042-60	FR-D820S-0.75K-042-60	1	4.2	–	–	5.0 (128)	2.7 (68)	5.6 (142.5)	1.8 (0.8)
D820S-070-60	FR-D820S-1.5K-070-60	2	7	–	–	5.0 (128)	4.3 (108)	5.7 (145)	2.9 (1.3)
D820S-100-60	FR-D820S-2.2K-100-60	3	10	–	–	5.0 (128)	4.3 (108)	5.7 (145)	3.1 (1.4)
3-Phase 200–240V Input & Output									
D820-008-60	FR-D820-0.1K-008-60	1/8	0.8	1/4	1.4 (1.1)	5.0 (128)	2.7 (68)	3.2 (80.5)	1.1 (0.5)
D820-014-60	FR-D820-0.2K-014-60	1/4	1.4	1/2	2.5 (2.0)	5.0 (128)	2.7 (68)	3.2 (80.5)	1.1 (0.5)
D820-025-60	FR-D820-0.4K-025-60	1/2	2.5	1	4.2 (3.5)	5.0 (128)	2.7 (68)	4.0 (102.5)	1.3 (0.6)
D820-042-60	FR-D820-0.75K-042-60	1	4.2	2	6.0 (5.1)	5.0 (128)	2.7 (68)	5.2 (132.5)	1.5 (0.7)
D820-070-60	FR-D820-1.5K-070-60	2	7	3	10 (8.5)	5.0 (128)	4.3 (108)	5.2 (132.5)	2.6 (1.2)
D820-100-60	FR-D820-2.2K-100-60	3	10	5	16.5 (12.0)	5.0 (128)	4.3 (108)	5.2 (132.5)	2.9 (1.3)
D820-165-60	FR-D820-3.7K-165-60	5	16.5	7.5	23.8 (19.6)	5.0 (128)	4.3 (108)	5.6 (142.5)	3.1 (1.4)
D820-238-60	FR-D820-5.5K-238-60	7.5	23.8	10	31.8 (26.0)	5.9 (150) *2	8.7 (220)	6.1 (155)	5.3 (2.4)
D820-318-60	FR-D820-7.5K-318-60	10	31.8	15	45 (37.0)	5.9 (150) *2	8.7 (220)	6.1 (155)	5.5 (2.5)
3-Phase 380–480V Input & Output									
D840-012-60	FR-D840-0.4K-012-60	1/2	1.2	1	2.2 (1.8)	5.0 (128)	2.7 (68)	5.1 (129.5)	1.8 (0.8)
D840-022-60	FR-D840-0.75K-022-60	1	2.2	2	3.7 (3.0)	5.0 (128)	2.7 (68)	5.1 (129.5)	1.8 (0.8)
D840-037-60	FR-D840-1.5K-037-60	2	3.7	3	5 (4.2)	5.0 (128)	2.7 (68)	6.6 (167.5)	2.4 (1.1)
D840-050-60	FR-D840-2.2K-050-60	3	5	5	8.1 (6.8)	5.0 (128)	4.3 (108)	6.1 (155.5)	2.9 (1.3)
D840-081-60	FR-D840-3.7K-081-60	5	8.1	7.5	12 (10.0)	5.0 (128)	4.3 (108)	6.1 (155.5)	3.1 (1.4)
D840-120-60	FR-D840-5.5K-120-60	7.5	12	10	16.3 (13.8)	5.9 (150) *2	8.7 (220)	6.1 (155)	5.1 (2.3)
D840-163-60	FR-D840-7.5K-163-60	10	16.3	15	23 (19.5)	5.9 (150) *2	8.7 (220)	6.1 (155)	5.3 (2.4)

Notes:

*1: The value in parentheses is the rated output current when the low acoustic noise operation is performed with the surrounding air temperature exceeding 30°C while a 3 kHz or higher value is selected in Pr.72 PWM frequency selection.

*2: The height dimension will be increased by about 2 mm as the fan cover fixing screw is installed.

FR-D800 Series Ethernet

Material Number	Model Number	HP (ND) (Default)	AMPS (ND) (Default)	HP (SLD)	AMPS (SLD) (*1)	Dimensions in Inches (mm)			Weight lbs (kg)
						Height	Width	Depth	
1-Phase 100–120VAC Input / 3-Phase 200–240VAC Output									
D810W-008-EPA-60	FR-D810W-0.1K-008-EPA-60	1/8	0.8	–	–	5.0 (128)	2.7 (68)	3.2 (80.5)	1.1 (0.5)
D810W-014-EPA-60	FR-D810W-0.2K-014-EPA-60	1/4	1.4	–	–	5.0 (128)	2.7 (68)	4.4 (110.5)	1.3 (0.6)
D810W-025-EPA-60	FR-D810W-0.4K-025-EPA-60	1/2	2.5	–	–	5.0 (128)	2.7 (68)	5.2 (132.5)	1.5 (0.7)
D810W-042-EPA-60	FR-D810W-0.75K-042-EPA-60	1	4.2	–	–	5.0 (128)	4.3 (108)	5.7 (145)	2.9 (1.3)
1-Phase 200–240V Input / 3-Phase 200-240VAC Output									
D820S-008-EPA-60	FR-D820S-0.1K-008-EPA-60	1/8	0.8	–	–	5.0 (128)	2.7 (68)	3.2 (80.5)	1.1 (0.5)
D820S-014-EPA-60	FR-D820S-0.2K-014-EPA-60	1/4	1.4	–	–	5.0 (128)	2.7 (68)	3.2 (80.5)	1.1 (0.5)
D820S-025-EPA-60	FR-D820S-0.4K-025-EPA-60	1/2	2.5	–	–	5.0 (128)	2.7 (68)	5.2 (132.5)	1.5 (0.7)
D820S-042-EPA-60	FR-D820S-0.75K-042-EPA-60	1	4.2	–	–	5.0 (128)	2.7 (68)	5.6 (142.5)	1.8 (0.8)
D820S-070-EPA-60	FR-D820S-1.5K-070-EPA-60	2	7	–	–	5.0 (128)	4.3 (108)	5.7 (145)	2.9 (1.3)
D820S-100-EPA-60	FR-D820S-2.2K-100-EPA-60	3	10	–	–	5.0 (128)	4.3 (108)	5.7 (145)	3.1 (1.4)
3-Phase 200–240V Input & Output									
D820-008-EPA-60	FR-D820-0.1K-008-EPA-60	1/8	0.8	1/4	1.4 (1.1)	5.0 (128)	2.7 (68)	3.2 (80.5)	1.1 (0.5)
D820-014-EPA-60	FR-D820-0.2K-014-EPA-60	1/4	1.4	1/2	2.5 (2.0)	5.0 (128)	2.7 (68)	3.2 (80.5)	1.1 (0.5)
D820-025-EPA-60	FR-D820-0.4K-025-EPA-60	1/2	2.5	1	4.2 (3.5)	5.0 (128)	2.7 (68)	4.0 (102.5)	1.3 (0.6)
D820-042-EPA-60	FR-D820-0.75K-042-EPA-60	1	4.2	2	6.0 (5.1)	5.0 (128)	2.7 (68)	5.2 (132.5)	1.5 (0.7)
D820-070-EPA-60	FR-D820-1.5K-070-EPA-60	2	7	3	10 (8.5)	5.0 (128)	4.3 (108)	5.2 (132.5)	2.6 (1.2)
D820-100-EPA-60	FR-D820-2.2K-100-EPA-60	3	10	5	16.5 (12.0)	5.0 (128)	4.3 (108)	5.2 (132.5)	2.9 (1.3)
D820-165-EPA-60	FR-D820-3.7K-165-EPA-60	5	16.5	7.5	23.8 (19.6)	5.0 (128)	4.3 (108)	5.6 (142.5)	3.1 (1.4)
D820-238-EPA-60	FR-D820-5.5K-238-EPA-60	7.5	23.8	10	31.8 (26.0)	5.9 (150) *2	8.7 (220)	6.1 (155)	5.3 (2.4)
D820-318-EPA-60	FR-D820-7.5K-318-EPA-60	10	31.8	15	45 (37.0)	5.9 (150) *2	8.7 (220)	6.1 (155)	5.5 (2.5)
3-Phase 380–480V Input & Output									
D840-012-EPA-60	FR-D840-0.4K-012-EPA-60	1/2	1.2	1	2.2 (1.8)	5.0 (128)	2.7 (68)	5.1 (129.5)	1.8 (0.8)
D840-022-EPA-60	FR-D840-0.75K-022-EPA-60	1	2.2	2	3.7 (3.0)	5.0 (128)	2.7 (68)	5.1 (129.5)	1.8 (0.8)
D840-037-EPA-60	FR-D840-1.5K-037-EPA-60	2	3.7	3	5 (4.2)	5.0 (128)	2.7 (68)	6.6 (167.5)	2.4 (1.1)
D840-050-EPA-60	FR-D840-2.2K-050-EPA-60	3	5	5	8.1 (6.8)	5.0 (128)	4.3 (108)	6.1 (155.5)	2.9 (1.3)
D840-081-EPA-60	FR-D840-3.7K-081-EPA-60	5	8.1	7.5	12 (10.0)	5.0 (128)	4.3 (108)	6.1 (155.5)	3.1 (1.4)
D840-120-EPA-60	FR-D840-5.5K-120-EPA-60	7.5	12	10	16.3 (13.8)	5.9 (150) *2	8.7 (220)	6.1 (155)	5.1 (2.3)
D840-163-EPA-60	FR-D840-7.5K-163-EPA-60	10	16.3	15	23 (19.5)	5.9 (150) *2	8.7 (220)	6.1 (155)	5.3 (2.4)

Notes:
*1: The value in parentheses is the rated output current when the low acoustic noise operation is performed with the surrounding air temperature exceeding 30°C while a 3 kHz or higher value is selected in Pr.72 PWM frequency selection.
*2: The height dimension will be increased by about 2 mm as the fan cover fixing screw is installed.

Load Rating	Overload Current Rating
Normal Duty (ND)	150% 60 s, 200% 0.5 s (inverse-time characteristics) at surrounding air temperature of 50°C
Super Light Duty (SLD)	110% 60 s, 120% 3 s (inverse-time characteristics) at surrounding air temperature of 40°C

FR-D800 General Specifications

Control Specifications	Control Method			Soft-PWM control / High carrier frequency PWM control
			Induction Motor	Selectable among V/F control and Advanced magnetic flux vector control
			PM Motor	PM sensorless vector control
	Output Frequency Range		Induction Motor	0.2 to 590 Hz (The upper-limit frequency is 400 Hz under Advanced magnetic flux vector control)
			PM Motor	0.2 to 400 Hz (not operable at a frequency higher than the maximum motor frequency)
	Frequency Setting and Resolution		Analog Input	0.015 Hz / 0 to 60 Hz at 0 to 10 V / 12 bits (terminals 2 and 4) 0.03 Hz / 0 to 60 Hz at 0 to 5 V / 11 bits or 0 to 20 mA / 11 bits (terminals 2 and 4)
			Digital Input	0.01 Hz
	Frequency Accuracy		Analog Input	Within ±0.2% of the maximum output frequency (25°C ±10°C)
			Digital Input	0.01% or less of the set output frequency
	Voltage/Frequency Characteristics			Base frequency can be set from 0 to 590 Hz. Constant-torque/variable-torque pattern can be selected (with induction motor only)
	Starting Torque		Analog Input	150% at 0.5 Hz (Advanced magnetic flux vector control)
			Digital Input	50%
	Torque Boost			Manual torque boost (induction motor only)
	Accel. / Decel. Time Setting			0 to 3600 s (acceleration and deceleration can be set individually), linear or S-pattern acceleration/deceleration modes are available
	DC Injection Brake		Induction Motor	Operation frequency (0 to 120 Hz), operation time (0 to 10 s), operation voltage (0% to 30%) variable (The current is limited at the inverter rated current)
			PM Motor	Operation time (0 to 10 s) variable, operating voltage (operating current) fixed
	Stall Prevention Operation Level			Operation current: 0% to 200% variable, with selectable availability of the function
	Torque Limit Level			Torque limit value can be set (0 to 400% variable); (Under PM sensorless vector control only)
Operation Specifications	Frequency Setting Signal		Analog Input	Terminals 2 and 4: 0 to 10 V / 0 to 5 V / 4 to 20 mA (0 to 20 mA)
			Digital Input	Input using the operation panel or parameter unit
			Pulse input	100k pulses/s (inverter)
	Start Signal			Forward and reverse rotation or start signal automatic self-holding input (3-wire input) can be selected
	Input Signal			5 points: Low-speed operation command, middle-speed operation command, high-speed operation command, forward rotation command, reverse rotation command. The input signal can be changed using Pr.178 to Pr.182 (Input terminal function selection)
	Operational Functions			Maximum and minimum frequency settings, multi-speed operation, acceleration/deceleration pattern, thermal protection, DC injection brake, starting frequency, JOG operation, output stop (MRS), stall prevention, regeneration avoidance, increased magnetic excitation deceleration, frequency jump, rotation display, automatic restart after instantaneous power failure, remote setting, retry function, carrier frequency selection, fast-response current limit, forward/reverse rotation prevention, operation mode selection, slip compensation, speed smoothing control, traverse, auto tuning, applied motor selection, RS-485 communication, PID control, easy dancer control, cooling fan operation selection, stop selection (deceleration stop/coasting), power failure time deceleration-to-stop function, life diagnosis, maintenance timer, current average monitor, multiple rating, speed control, torque limit, test operation, safety stop function, emergency drive, Optimum excitation control
	Output Signal	Open Collector Output		2 points: Inverter running, Up to frequency, Fault The output signal can be changed using Pr.190 to Pr.192 (Output terminal function selection)
		Relay Output		1 point: Inverter running, Up to frequency, Fault The output signal can be changed using Pr.190 to Pr.192 (Output terminal function selection)
		Analog output		Terminal AM: 0 to +10 V / 12 bits
Protective Functions				Overcurrent trip during acceleration, overcurrent trip during constant speed, overcurrent trip during deceleration/stop, regenerative overvoltage trip during acceleration, regenerative overvoltage trip during constant speed, regenerative overvoltage trip during deceleration or stop, inverter overload trip (electronic thermal relay function), motor overload trip (electronic thermal relay function), heat sink overheat, undervoltage, input phase loss (*1), stall prevention stop, loss of synchronism detection (*2), upper limit fault detection, lower limit fault detection, brake transistor fault, output side earth (ground) fault overcurrent, output short circuit, inrush resistance overheat, output phase loss, external thermal relay operation, PTC thermistor operation (*2), Internal storage device fault, parameter storage device fault, disconnected PU, retry count excess, CPU fault, abnormal output current detection, USB communication fault, analog input fault, safety circuit fault, speed deviation excess detection (*2), PID signal fault, internal circuit fault
Warning Functions				Fan alarm, stall prevention (overcurrent), stall prevention (overvoltage), regenerative brake pre-alarm (*2), electronic thermal relay function pre-alarm, PU stop, maintenance timer alarm, parameter write error, operation panel lock (*2), Password locked (*2), safety stop, load fault warning (*2), emergency drive in operation (*2), Continuous operation during communication fault (*2), incorrect parameter setting
Environment	Surrounding Air Temperature			20°C to +60°C; ND rating: The rated current must be reduced at a temperature above 50°C SLD rating: The rated current must be reduced at a temperature above 40°C
	Surrounding Air Humidity			95% RH or less (non-condensing) (With circuit board coating (conforming to IEC 60721-3-3:1994 3C2/3S2) 90% RH or less (non-condensing) (Without circuit board coating)
	Storage Temperature (*3)			-40°C to +70°C
	Atmosphere			Indoors (free from corrosive gas, flammable gas, oil mist, dust and dirt)
	Altitude/Vibration			Maximum 3000 m (*4), 5.9 m/s^2 or less at 10 to 55 Hz in X, Y, and Z directions

Notes:
1. Available for the three-phase power input model.
2. Not activated in the inverter in the initial state.
3. Applicable to conditions for a short time, for example, in transit.
4. For the installation at an altitude above 1000 m, consider a 3% reduction in the rated current per 500 m increase in altitude.

FR-D800 Series (Standard) Terminal Connection Diagram

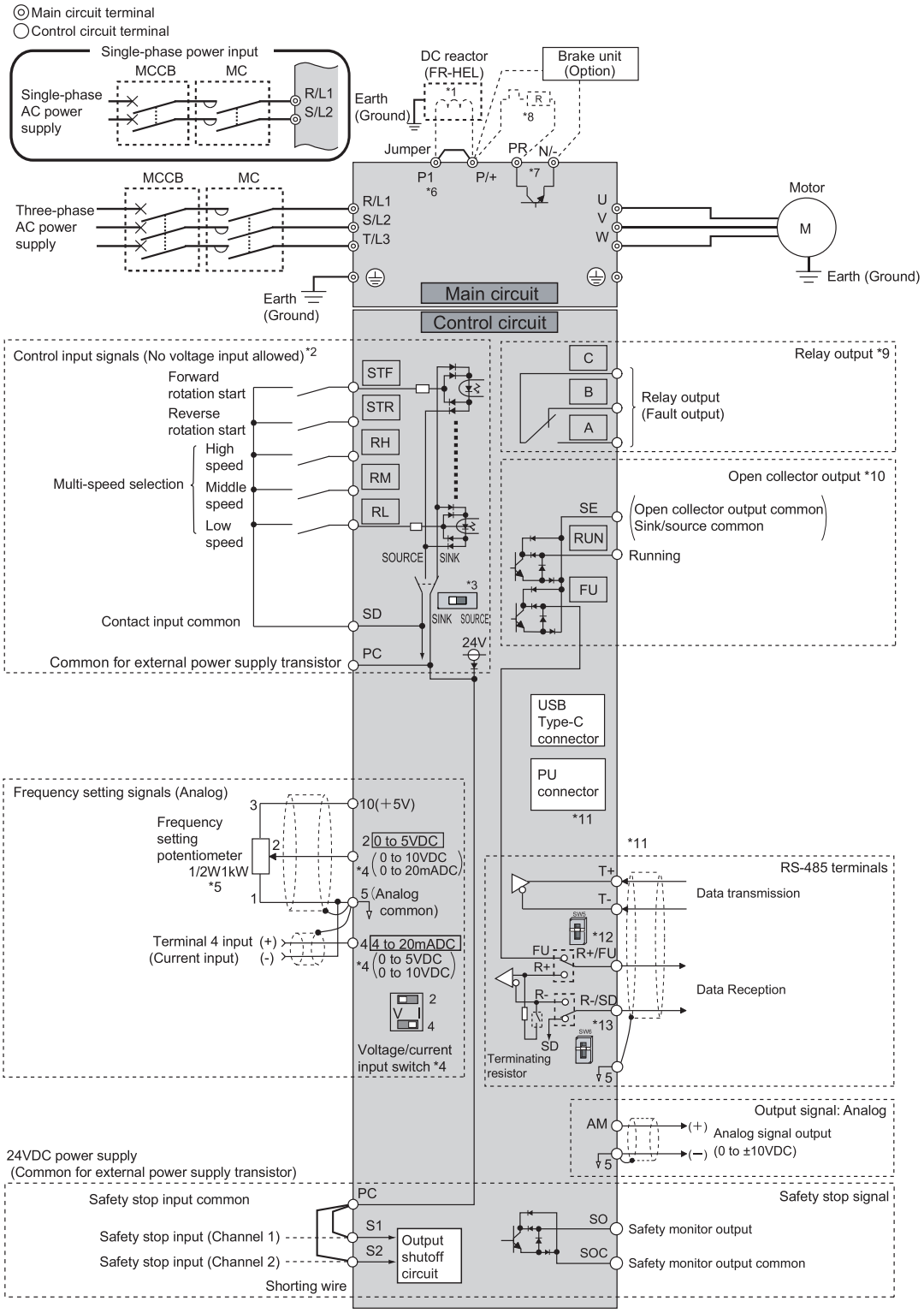

Notes:

1. Remove the jumper between P1 and P/+ to connect the DC reactor. (Single-phase 100 V power input model is not compatible with the DC reactor.)
2. The function of these terminals can be changed using the Input terminal function selection (Pr.178 to Pr.182). (Refer to the Instruction Manual (Function).)
3. The initial setting varies depending on the specification.
4. Terminal input specifications can be changed by analog input specification switchover (Pr.73, Pr.267). To input voltage, set the voltage/current input switch to "V". To input current, set the switch to "I". The initial setting varies depending on the specification. (Refer to the Instruction Manual (Function).)
5. It is recommended to use 2 W 1 k when the frequency setting signal is changed frequently.
6. Terminal P1 is not available for the single-phase 100 V power input models.
7. A brake transistor is not built in to the FR-D820-0.1K-008, FR-D820-0.2K-014, FR-D820S-0.1K-008, FR-D820S-0.2K-014, FR-D810W-0.1K-008, and FR-D810W-0.2K-014.
8. Brake resistor (FR-ABR, MRS, MYS) Install a thermal relay to prevent overheating and damage of brake resistors. (A brake resistor cannot be connected to the FR-D820-0.1K-008, FR-D820-0.2K-014, FR-D820S-0.1K-008, FR-D820S-0.2K-014, FR-D810W-0.1K-008, and FR-D810W-0.2K-014.) (Refer to page 82.)
9. The function of these terminals can be changed using the Pr.192 ABC terminal function selection.
10. The function of these terminals can be changed using the Output terminal function selection (Pr.190 or Pr.191). (Refer to the Instruction Manual (Function).)
11. The communication circuit is shared between the PU connector and the RS-485 terminals. The PU connector and the RS-485 terminals cannot be used simultaneously. Use either the connector or the terminals, and do not wire the other. RS-485 communication via the PU connector is enabled initially.
12. Initially set to FU. Switch between R+ and FU. Both cannot be selected at the same time.
13. Initially set to SD. Switch between R- and SD. Both cannot be selected at the same time.

FR-D800 Series (Ethernet) Terminal Connection Diagram

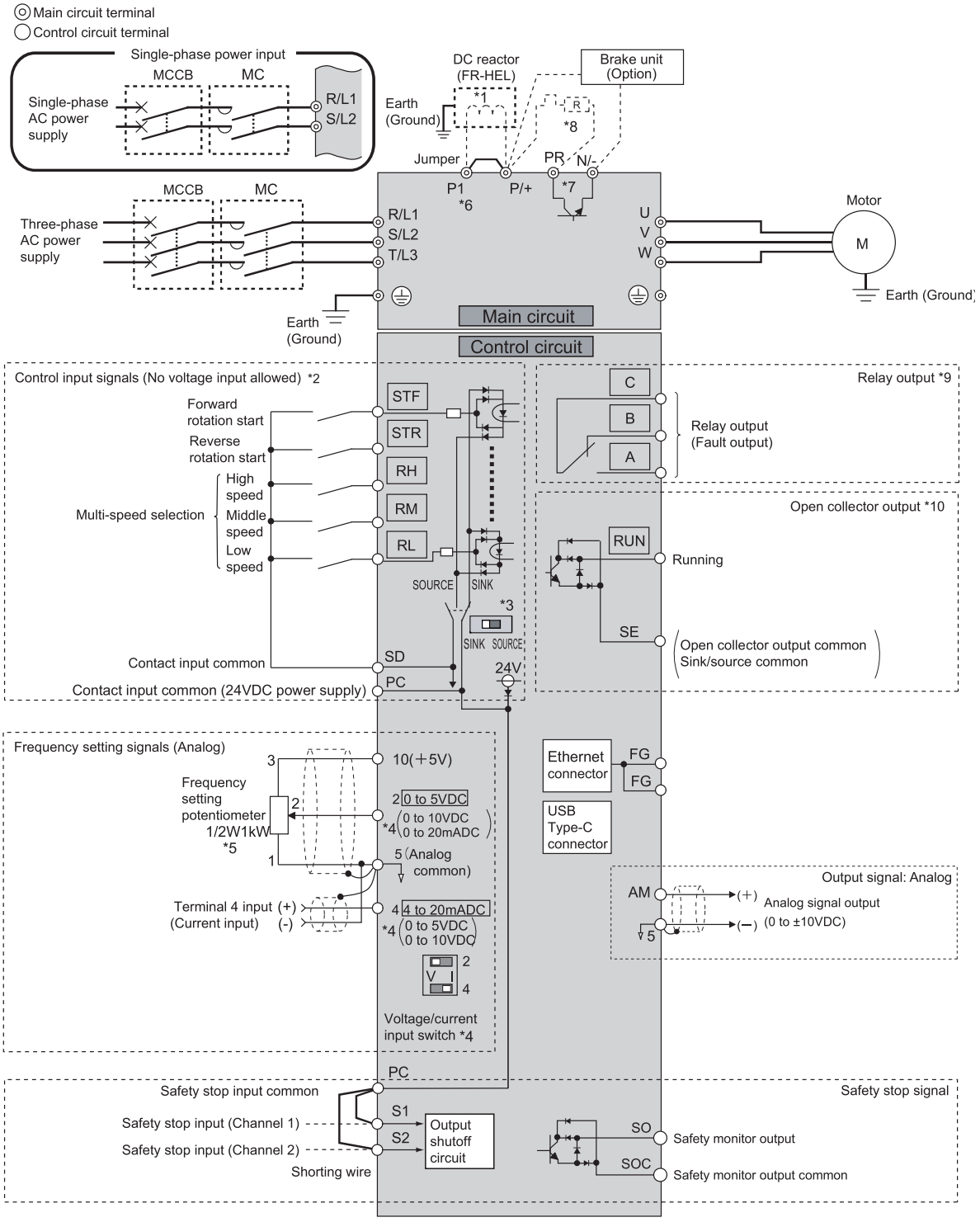

Notes:

1. Remove the jumper between P1 and P/+ to connect the DC reactor. (Single-phase 100 V power input model is not compatible with the DC reactor.)
2. The function of these terminals can be changed using the Input terminal function selection (Pr.178 to Pr.182). (Refer to the Instruction Manual (Function).)
3. The initial setting varies depending on the specification.
4. Terminal input specifications can be changed by analog input specification switchover (Pr.73, Pr.267). To input voltage, set the voltage/current input switch to "V". To input current, set the switch to "I". The initial setting varies depending on the specification. (Refer to the Instruction Manual (Function).)
5. It is recommended to use 2 W 1 k when the frequency setting signal is changed frequently.
6. Terminal P1 is not available for the single-phase 100 V power input models.
7. A brake transistor is not built in to the FR-D820-0.1K-008, FR-D820-0.2K-014, FR-D820S-0.1K-008, FR-D820S-0.2K-014, FR-D810W-0.1K-008, and FR-D810W-0.2K-014.
8. Brake resistor (FR-ABR, MRS, MYS) Install a thermal relay to prevent overheating and damage of brake resistors. (A brake resistor cannot be connected to the FR-D820-0.1K-008, FR-D820-0.2K-014, FR-D820S-0.1K-008, FR-D820S-0.2K-014, FR-D810W-0.1K-008, and FR-D810W-0.2K-014.) (Refer to page 82.)
9. The function of these terminals can be changed using the Pr.192 ABC terminal function selection.
10. The function of these terminals can be changed using the Output terminal function selection (Pr.190 or Pr.192). (Refer to the Instruction Manual (Function).)

Control Circuit Terminal Layout

Recommended wire size: 0.3 to 0.75 mm²

Standard Model

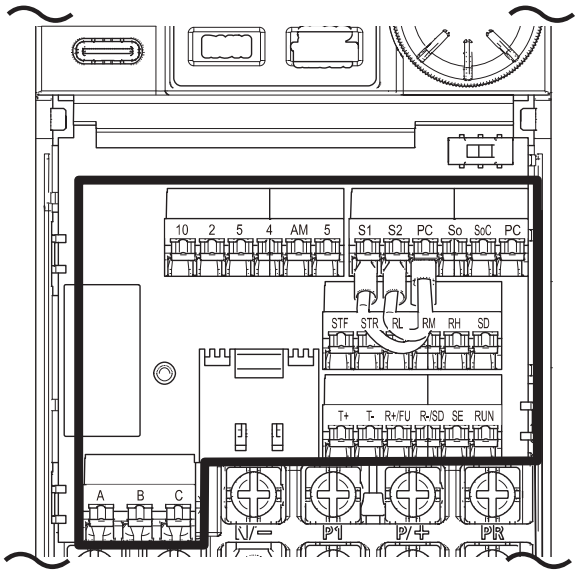

Ethernet Model

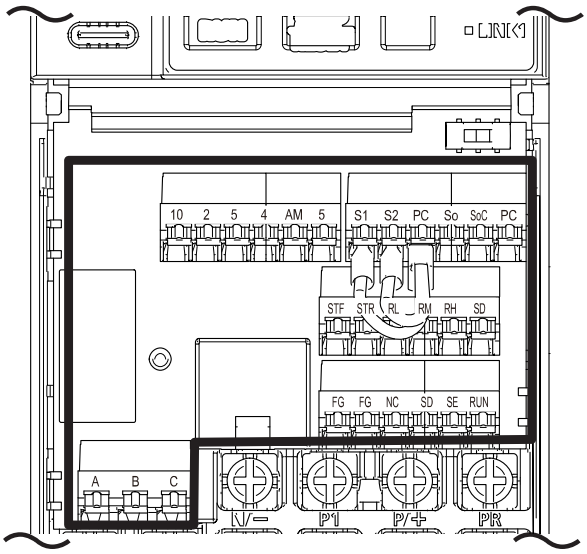

FR-D800 Series Options

Name		Type	Applications	Remarks
Stand-alone Type	LCD Operation Panel	FR-LU08 (-01)	Graphical operation panel with liquid crystal display	Shared among all models
	Parameter Unit	FR-PU07	Interactive parameter unit with LCD display	
	Parameter Unit with Battery Pack	FR-PU07BB (-L)	This parameter unit enables parameter setting without connecting the inverter to power supply	
	Enclosure Surface Operation Panel	FR-PA07	This operation panel enables inverter operation and monitoring of frequency, etc. from the enclosure surface	
	Parameter Unit Connection Cable	FR-CB20☐	Cable for connection of operation panel or parameter unit ☐ indicates a cable length. (1m, 3m, 5m)	
	Intercompatibility Attachment	FR-D8AT01 FR-D8AT02 FR-E8AT03 FR-E7AT02	This attachment is used to install the FR-D800 series inverter using the installation holes of the FR-D700	Not required for all models
	Panel Through Attachment	–	To be supported soon	
	AC Reactor	FR-HAL-☐	For harmonic current reduction and inverter input power factor improvement	This option's model varies with the inverter's model
	DC Reactor	FR-HEL-☐		
	Filterpack	FR-BFP2	Combination of power factor improving DC reactor, common mode choke, and capacitive filter	0.4K to 15K of the three-phase power input model
	Brake Unit, Resistor Unit, Discharging Resistor	FR-BU2, FR-BR, GZG, GRZG type	For increasing the braking capability of the inverter (for high-inertia load or negative load) Brake unit, electrical-discharge resistor and resistor unit are used in combination	0.4K or higher
	Multifunction Regeneration Converter Dedicated Stand-alone Reactor Dedicated Box-type Reactor	FR-XC FR-XCL/FR-XCG FR-XCB	One inverter can handle harmonic suppression and power regeneration. Functions that match the application can be selected by combining the inverter/converter with the dedicated reactor FR-XCB (box-type) or FR-XCL/FR-XCG	
	High Power Factor Converter	FR-HC2	The high power factor converter switches the converter section on/off to reshape an input current waveform into a sine wave, greatly suppressing harmonics. (Used in combination with the standard accessory)	
	Surge Voltage Suppression Filter	FR-ASF-H☐	Filter for suppressing surge voltage on motor	400V
		FR-BMF-H☐		400V: 5.5K or higher
Others	Pilot Generator	QVAH-10	For tracking operation. 70 V / 35 VAC 500 Hz (at 2500 r/min)	Shared among all models
	Deviation Sensor	YVGC-500W-NS	For continuous speed control operation (mechanical deviation detection) Output 90 VAC /90°	
	Calibration Resistor	RV24YN 10kΩ	For frequency meter calibration. Carbon film type B characteristic	
	FR Configurator2 (Inverter Setup Software)	FR-CONFIGURATOR2	Supports an inverter startup to maintenance.	

DIN Rail Mounting Attachment

This attachment allows the FR-D800 to mount on a 35mm DIN rail.

Attachment Model	Inverter Capacity			
	D820	D840	D820S	D810W
FR-UDA01	0.1K-008, 0.2K-014, 0.4K-025, 0.75K-042	0.4K-012, 0.75K-022, 1.5K-037	0.1K-008, 0.2K-014, 0.4K-025, 0.75K-042	0.1K-008, 0.2K-014, 0.4K-025
FR-UDA02	1.5K-070, 2.2K-100, 3.7K-165	2.2K-050, 3.7K-081	1.5K-070, 2.2K-100	0.75K-042

Radio Noise Filter

This filter is connected to the input of the drive and helps to reduce radiated noise in the radio frequencies.

Drive Voltage Class	Model Number	Dimensions (L x W x D)
200V	FR-BIF	2.3 x 1.8 x 1.7 in (58 x 44 x 42 mm)
400V	FR-BIF-H	

Line Noise Filter

Provides a toroid for line noise reduction.

Drive HP	Model Number	Dimensions (L x W x D)
½ to 5	FR-BSF01	4.3 x 0.9 x 2.6 in (110 x 22.5 x 65 mm)
½ to 10	FR-BLF	7.1 x 1.2 x 3.3 in (180 x 31.5 x 83 mm)

Dynamic Braking Resistors

Inverter Model [-60, -EPA-60]	10% Duty Cycle Resistor Model Number *(Parts in bold consist of a resistor pair that will need to be wired in parallel)	33% Duty Cycle Resistor Model Number *(Parts in bold consist of a resistor pair that will need to be wired in parallel)	Motor Capacity HP (kW)	Braking Torque
FR-D810W-0.4K-025	RFP-V-200-S1025-10	RFP-V-200-S1025-33	0.5 (0.4)	100%
FR-D810W-0.75K-042	RFP-V-200-S1042-10	RFP-V-300-S1042-33	1 (0.75)	100%
FR-D820S-0.4K-025	RFP-V-200-S020-10	RFP-V-200-S020-33	0.5 (0.4)	100%
FR-D820S-0.75K-042	RFP-V-200-S042-10	RFP-V-300-S042-33	1 (0.75)	100%
FR-D820S-1.5K-070	RFP-V-200-S070-10	RFP-V-500-S070-33	2 (1.5)	100%
FR-D820S-2.2K-100	RFP-V-300-S100-10	**RFP-V-400-S100-33**	3 (2.2)	100%
FR-D820-0.4K-025	RFP-V-200-025-10	RFP-V-200-025-33	0.5 (0.4)	100%
FR-D820-0.75K-042	RFP-V-200-042-10	RFP-V-300-042-33	1 (0.75)	100%
FR-D820-1.5K-070	RFP-V-200-070-10	RFP-V-500-070-33	2 (1.5)	100%
FR-D820-2.2K-100	RFP-V-300-100-10	**RFP-V-400-100-33**	3 (2.2)	100%
FR-D820-3.7K-165	RFP-V-400-165-10	CU-DB44D0-165-33	5 (3.7)	100%
FR-D820-5.5K-238	**RFP-V-300-238-10**	CU-DB28D0-238-33	7.5 (5.5)	100%
FR-D820-7.5K-318	**RFP-V-400-318-10**	CU-DB22D0-318-33	10 (7.5)	100%
FR-D840-0.4K-012	RFP-V-400-012-10	RFP-V-400-012-33	0.5 (0.4)	100%
FR-D840-0.75K-022	RFP-V-300-022-10	RFP-V-300-022-33	1 (0.75)	100%
FR-D840-1.5K-037	RFP-V-300-036-10	RFP-V-500-036-33	2 (1.5)	100%
FR-D840-2.2K-050	RFP-V-300-050-10	**RFP-V-400-050-33**	3 (2.2)	100%
FR-D840-3.7K-081	RFP-V-400-080-10	CU-DB0143-080-33	5 (3.7)	100%
FR-D840-5.5K-120	**RFP-V-300-120-10**	CU-DB0103-120-33	7.5 (5.5)	100%
FR-D840-7.5K-163	**RFP-V-400-160-10**	CU-DB74D0-160-33	10 (7.5)	100%

FR-E800 Series

World's smallest class inverter with high functionality.

- Up to 30HP
- SIl3 safety models
- Improved usability by supporting CC-Link IE TSN as standard
- Multi-protocol support enables switching between various types of communication networks
- Enabled flexible connection with two Ethernet ports
- The AI fault diagnosis function is used to identify the cause of a fault, enabling the fastest troubleshooting procedure
- Position and orientation controls for simple motion applications
- Enhanced predictive maintenance
- Using smartphones or tablets, you can scan the QR code on the product to access the setup information, or you can access inverters via wireless remote network with a mobile app.
- Various control methods such as Vector control (with encoder), Real sensorless vector control (without encoder), and positioning without using sensors are supported. Premium efficiency motors and PM motors are supported, enabling applications in various solutions



FR-E800-5 FR-E800-E

E8 □ □ □ - □ □ □ □

Symbol	Voltage Class
1	100V
2	200V
4	400V
6	600V

Symbol	Structure, Functionality
0	Standard model

Symbol	Voltage Specifications
None	Three-phase
S	Single phase 200V input
W	Single phase 100V input (double voltage rectification)

Symbol	Description
0.1K to 22K	Inverter ND rated capacity (kW)
0008 to 0900	10 times of the inverter ND rated current (A)

Symbol	Monitoring/Protocol Specification	Rated Frequency
-1	Pulse (terminal FM)	60Hz
-4	Voltage (terminal AM)	50Hz
-5	Voltage (terminal AM)	60Hz
PA	Protocol Group A (CC-Link IE TSN, CC-Link IE FIeld Network Basic, MODBUS/TCP, EtherNet/IP, and BACnet/IP)	60Hz
PB	Protocol Group B (CC-Link IE TSN, CC-Link IE Field Basic Network Basic, MODBUS/TCP, and PROFINET)	50Hz
PC	Protocol Group C (EtherCAT)	50Hz

Symbol	Circuit Board Coating
None	Without coating
-60	With coating

Symbol	Communication/Functional Safety Specification
None	RS-485 + SIL2/PLd
E	Ethernet + SIL2PLd
SCE	Ethernet + SIL3/PLe

FR-E820S

1-Phase 240V Serial Modbus RTU	HP (ND)	AMPS (ND)
E820S-0008-5-60	1/8	0.8
E820S-0015-5-60	1/4	1.5
E820S-0030-5-60	1/2	3
E820S-0050-5-60	1	5
E820S-0080-5-60	2	8
E820S-0110-5-60	3	11

1-Phase 240V Ethernet Protocol A	HP (ND)	AMPS (ND)
E820S-0008EPA-60	1/8	0.8
E820S-0015EPA-60	1/4	1.5
E820S-0030EPA-60	1/2	3
E820S-0050EPA-60	1	5
E820S-0080EPA-60	2	8
E820S-0110EPA-60	3	11

1-Phase 240V Ethernet Protocol B	HP (ND)	AMPS (ND)
E820S-0008EPB-60	1/8	0.8
E820S-0015EPB-60	1/4	1.5
E820S-0030EPB-60	1/2	3
E820S-0050EPB-60	1	5
E820S-0080EPB-60	2	8
E820S-0110EPB-60	3	11

1-Phase 240V Ethernet Protocol C	HP (ND)	AMPS (ND)
E820S-0008EPC-60	1/8	0.8
E820S-0015EPC-60	1/4	1.5
E820S-0030EPC-60	1/2	3
E820S-0050EPC-60	1	5
E820S-0080EPC-60	2	8
E820S-0110EPC-60	3	11

1-Phase 240V Safety Protocol A	HP (ND)	AMPS (ND)
E820S-0008SCEPA-60	1/8	0.8
E820S-0015SCEPA-60	1/4	1.5
E820S-0030SCEPA-60	1/2	3
E820S-0050SCEPA-60	1	5
E820S-0080SCEPA-60	2	8
E820S-0110SCEPA-60	3	11

1-Phase 240V Safety Protocol B	HP (ND)	AMPS (ND)
E820S-0008SCEPB-60	1/8	0.8
E820S-0015SCEPB-60	1/4	1.5
E820S-0030SCEPB-60	1/2	3
E820S-0050SCEPB-60	1	5
E820S-0080SCEPB-60	2	8
E820S-0110SCEPB-60	3	11

Load Rating	Overload Current Rating
Normal Duty (ND)	150% 60 seconds, 200% 3 seconds (inverse-time characteristics) at surrounding air temperature of 50°C.

FR-E820

240V Ethernet Protocol A	HP (ND)	AMPS (ND)	AMPS (LD)
E820-0008EPA-60	1/8	0.8	1.3
E820-0015EPA-60	1/4	1.5	2
E820-0030EPA-60	1/2	3	3.5
E820-0050EPA-60	1	5	6
E820-0080EPA-60	2	8	9.6
E820-0110EPA-60	3	11	12
E820-0175EPA-60	5	17.5	19.6
E820-0240EPA-60	7.5	24	30
E820-0330EPA-60	10	33	40
E820-0470EPA-60	15	47	56
E820-0600EPA-60	20	60	69
E820-0760EPA-60	25	76	88
E820-0900EPA-60	30	90	115

3-Phase 240V Serial Modbus RTU	HP (ND)	AMPS (ND)	AMPS (LD)
E820-0008-5-60	1/8	0.8	1.3
E820-0015-5-60	1/4	1.5	2
E820-0030-5-60	1/2	3	3.5
E820-0050-5-60	1	5	6
E820-0080-5-60	2	8	9.6
E820-0110-5-60	3	11	12
E820-0175-5-60	5	17.5	19.6
E820-0240-5-60	7.5	24	30
E820-0330-5-60	10	33	40
E820-0470-5-60	15	47	56
E820-0600-5-60	20	60	69
E820-0760-5-60	25	76	88
E820-0900-5-60	30	90	115

240V Ethernet Protocol B	HP (ND)	AMPS (ND)	AMPS (LD)
E820-0008EPB-60	1/8	0.8	1.3
E820-0015EPB-60	1/4	1.5	2
E820-0030EPB-60	1/2	3	3.5
E820-0050EPB-60	1	5	6
E820-0080EPB-60	2	8	9.6
E820-0110EPB-60	3	11	12
E820-0175EPB-60	5	17.5	19.6
E820-0240EPB-60	7.5	24	30
E820-0330EPB-60	10	33	40
E820-0470EPB-60	15	47	56
E820-0600EPB-60	20	60	69
E820-0760EPB-60	25	76	88
E820-0900EPB-60	30	90	115

240V Safety Protocol A	HP (ND)	AMPS (ND)	AMPS (LD)
E820-0008SCEPA-60	1/8	0.8	1.3
E820-0015SCEPA-60	1/4	1.5	2
E820-0030SCEPA-60	1/2	3	3.5
E820-0050SCEPA-60	1	5	6
E820-0080SCEPA-60	2	8	9.6
E820-0110SCEPA-60	3	11	12
E820-0175SCEPA-60	5	17.5	19.6
E820-0240SCEPA-60	7.5	24	30
E820-0330SCEPA-60	10	33	40
E820-0470SCEPA-60	15	47	56
E820-0600SCEPA-60	20	60	69
E820-0760SCEPA-60	25	76	88
E820-0900SCEPA-60	30	90	115

240V Ethernet Protocol C	HP (ND)	AMPS (ND)	AMPS (LD)
E820-0008EPC-60	1/8	0.8	1.3
E820-0015EPC-60	1/4	1.5	2
E820-0030EPC-60	1/2	3	3.5
E820-0050EPC-60	1	5	6
E820-0080EPC-60	2	8	9.6
E820-0110EPC-60	3	11	12
E820-0175EPC-60	5	17.5	19.6
E820-0240EPC-60	7.5	24	30
E820-0330EPC-60	10	33	40
E820-0470EPC-60	15	47	56
E820-0600EPC-60	20	60	69
E820-0760EPC-60	25	76	88
E820-0900EPC-60	30	90	115

240V Safety Protocol B	HP (ND)	AMPS (ND)	AMPS (LD)
E820-0008SCEPB-60	1/8	0.8	1.3
E820-0015SCEPB-60	1/4	1.5	2
E820-0030SCEPB-60	1/2	3	3.5
E820-0050SCEPB-60	1	5	6
E820-0080SCEPB-60	2	8	9.6
E820-0110SCEPB-60	3	11	12
E820-0175SCEPB-60	5	17.5	19.6
E820-0240SCEPB-60	7.5	24	30
E820-0330SCEPB-60	10	33	40
E820-0470SCEPB-60	15	47	56
E820-0600SCEPB-60	20	60	69
E820-0760SCEPB-60	25	76	88
E820-0900SCEPB-60	30	90	115

Load Rating	Overload Current Rating
Light Duty (LD)	120% 60 seconds, 150% 3 seconds (inverse-time characteristics) at surrounding air temperature of 50°C.
Normal Duty (ND)	150% 60 seconds, 200% 3 seconds (inverse-time characteristics) at surrounding air temperature of 50°C.

FR-E840

480V Serial Modbus RTU	HP (ND)	AMPS (ND)	AMPS (LD)
E840-0016-5-60	1/2	1.6	2.1
E840-0026-5-60	1	2.6	3.5
E840-0040-5-60	2	4	5.5
E840-0060-5-60	3	6	6.9
E840-0095-5-60	5	9.5	11.1
E840-0120-5-60	7.5	12	17.5
E840-0170-5-60	10	17	23
E840-0230-5-60	15	23	35
E840-0300-5-60	20	30	41
E840-0380-5-60	25	38	45
E840-0440-5-60	30	44	60

480V Ethernet Protocol C	HP (ND)	AMPS (ND)	AMPS (LD)
E840-0016EPC-60	1/2	1.6	2.1
E840-0026EPC-60	1	2.6	3.5
E840-0040EPC-60	2	4	5.5
E840-0060EPC-60	3	6	6.9
E840-0095EPC-60	5	9.5	11.1
E840-0120EPC-60	7.5	12	17.5
E840-0170EPC-60	10	17	23
E840-0230EPC-60	15	23	35
E840-0300EPC-60	20	30	41
E840-0380EPC-60	25	38	45
E840-0440EPC-60	30	44	60

480V Ethernet Protocol A	HP (ND)	AMPS (ND)	AMPS (LD)
E840-0016EPA-60	1/2	1.6	2.1
E840-0026EPA-60	1	2.6	3.5
E840-0040EPA-60	2	4	5.5
E840-0060EPA-60	3	6	6.9
E840-0095EPA-60	5	9.5	11.1
E840-0120EPA-60	7.5	12	17.5
E840-0170EPA-60	10	17	23
E840-0230EPA-60	15	23	35
E840-0300EPA-60	20	30	41
E840-0380EPA-60	25	38	45
E840-0440EPA-60	30	44	60

480V Safety Protocol A	HP (ND)	AMPS (ND)	AMPS (LD)
E840-0016SCEPA-60	1/2	1.6	2.1
E840-0026SCEPA-60	1	2.6	3.5
E840-0040SCEPA-60	2	4	5.5
E840-0060SCEPA-60	3	6	6.9
E840-0095SCEPA-60	5	9.5	11.1
E840-0120SCEPA-60	7.5	12	17.5
E840-0170SCEPA-60	10	17	23
E840-0230SCEPA-60	15	23	35
E840-0300SCEPA-60	20	30	41
E840-0380SCEPA-60	25	38	45
E840-0440SCEPA-60	30	44	60

480V Ethernet Protocol B	HP (ND)	AMPS (ND)	AMPS (LD)
E840-0016EPB-60	1/2	1.6	2.1
E840-0026EPB-60	1	2.6	3.5
E840-0040EPB-60	2	4	5.5
E840-0060EPB-60	3	6	6.9
E840-0095EPB-60	5	9.5	11.1
E840-0120EPB-60	7.5	12	17.5
E840-0170EPB-60	10	17	23
E840-0230EPB-60	15	23	35
E840-0300EPB-60	20	30	41
E840-0380EPB-60	25	38	45
E840-0440EPB-60	30	44	60

480V Safety Protocol B	HP (ND)	AMPS (ND)	AMPS (LD)
E840-0016SCEPB-60	1/2	1.6	2.1
E840-0026SCEPB-60	1	2.6	3.5
E840-0040SCEPB-60	2	4	5.5
E840-0060SCEPB-60	3	6	6.9
E840-0095SCEPB-60	5	9.5	11.1
E840-0120SCEPB-60	7.5	12	17.5
E840-0170SCEPB-60	10	17	23
E840-0230SCEPB-60	15	23	35
E840-0300SCEPB-60	20	30	41
E840-0380SCEPB-60	25	38	45
E840-0440SCEPB-60	30	44	60

Load Rating	Overload Current Rating
Light Duty (LD)	120% 60 seconds, 150% 3 seconds (inverse-time characteristics) at surrounding air temperature of 50°C.
Normal Duty (ND)	150% 60 seconds, 200% 3 seconds (inverse-time characteristics) at surrounding air temperature of 50°C.

FR-E860

575V Serial Modbus RTU	HP (ND)	AMPS (ND)	AMPS (LD)
E860-0017-5-60	1	1.7	2.5
E860-0027-5-60	2	2.7	3.6
E860-0040-5-60	3	4.0	5.6
E860-0061-5-60	5	6.1	8.2
E860-0090-5-60	7.5	9	11
E860-0120-5-60	10	12	16

575V Ethernet Protocol C	HP (ND)	AMPS (ND)	AMPS (LD)
E860-0017EPC-60	1	1.7	2.5
E860-0027EPC-60	2	2.7	3.6
E860-0040EPC-60	3	4.0	5.6
E860-0061EPC-60	5	6.1	8.2
E860-0090EPC-60	7.5	9	11
E860-0120EPC-60	10	12	16

575V Ethernet Protocol A	HP (ND)	AMPS (ND)	AMPS (LD)
E860-0017EPA-60	1	1.7	2.5
E860-0027EPA-60	2	2.7	3.6
E860-0040EPA-60	3	4.0	5.6
E860-0061EPA-60	5	6.1	8.2
E860-0090EPA-60	7.5	9	11
E860-0120EPA-60	10	12	16

575V Safety Protocol A	HP (ND)	AMPS (ND)	AMPS (LD)
E860-0017SCEPA-60	1	1.7	2.5
E860-0027SCEPA-60	2	2.7	3.6
E860-0040SCEPA-60	3	4.0	5.6
E860-0061SCEPA-60	5	6.1	8.2
E860-0090SCEPA-60	7.5	9	11
E860-0120SCEPA-60	10	12	16

575V Ethernet Protocol B	HP (ND)	AMPS (ND)	AMPS (LD)
E860-0017EPB-60	1	1.7	2.5
E860-0027EPB-60	2	2.7	3.6
E860-0040EPB-60	3	4.0	5.6
E860-0061EPB-60	5	6.1	8.2
E860-0090EPB-60	7.5	9	11
E860-0120EPB-60	10	12	16

575V Safety Protocol B	HP (ND)	AMPS (ND)	AMPS (LD)
E860-0017SCEPB-60	1	1.7	2.5
E860-0027SCEPB-60	2	2.7	3.6
E860-0040SCEPB-60	3	4.0	5.6
E860-0061SCEPB-60	5	6.1	8.2
E860-0090SCEPB-60	7.5	9	11
E860-0120SCEPB-60	10	12	16

Load Rating	Overload Current Rating
Light Duty (LD)	120% 60 seconds, 150% 3 seconds (inverse-time characteristics) at surrounding air temperature of 50°C.
Normal Duty (ND)	150% 60 seconds, 200% 3 seconds (inverse-time characteristics) at surrounding air temperature of 50°C.

FR-E810W

1-Phase 120V Serial Modbus RTU	HP (ND)	AMPS (ND)
E810W-0008-5-60	1/8	0.8
E810W-0015-5-60	1/4	1.5
E810W-0030-5-60	1/2	3
E810W-0050-5-60	1	5

1-Phase 120V Ethernet Protocol C	HP (ND)	AMPS (ND)
E810W-0008EPC-60	1/8	0.8
E810W-0015EPC-60	1/4	1.5
E810W-0030EPC-60	1/2	3
E810W-0050EPC-60	1	5

1-Phase 120V Ethernet Protocol A	HP (ND)	AMPS (ND)
E810W-0008EPA-60	1/8	0.8
E810W-0015EPA-60	1/4	1.5
E810W-0030EPA-60	1/2	3
E810W-0050EPA-60	1	5

1-Phase 120V Safety Protocol A	HP (ND)	AMPS (ND)
E810W-0008SCEPA-60	1/8	0.8
E810W-0015SCEPA-60	1/4	1.5
E810W-0030SCEPA-60	1/2	3
E810W-0050SCEPA-60	1	5

1-Phase 120V Ethernet Protocol B	HP (ND)	AMPS (ND)
E810W-0008EPB-60	1/8	0.8
E810W-0015EPB-60	1/4	1.5
E810W-0030EPB-60	1/2	3
E810W-0050EPB-60	1	5

1-Phase 120V Safety Protocol B	HP (ND)	AMPS (ND)
E810W-0008SCEPB-60	1/8	0.8
E810W-0015SCEPB-60	1/4	1.5
E810W-0030SCEPB-60	1/2	3
E810W-0050SCEPB-60	1	5

Load Rating	Overload Current Rating
Normal Duty (ND)	150% 60 seconds, 200% 3 seconds (inverse-time characteristics) at surrounding air temperature of 50°C.

Specifications

Three-Phase 200V Class

Model FR-E820-_				0008	0015	0030	0050	0080	0110	0175	0240	0330	0470	0600	0760	0900
				0.1K	0.2K	0.4K	0.75K	1.5K	2.2K	3.7K	5.5K	7.5K	11K	15K	18.5K	22K
Stocked Item				S	S	S	S	S	S	S	S	S	S	S	S	S
Applicable Motor Capacity (kW) (*1)			LD	0.2	0.4	0.75	1.1	2.2	3.0	5.5	7.5	11	15.0	18.5	22.0	30.0
			ND	0.1	0.2	0.4	0.75	1.5	2.2	3.7	5.5	7.5	11.0	15.0	18.5	22.0
Output	Rated Capacity (kVA) (*2)		LD	0.5	0.8	1.4	2.4	3.8	4.8	7.8	12.0	15.9	22.3	27.5	35.1	45.8
			ND	0.3	0.6	1.2	2.0	3.2	4.4	7.0	9.6	13.1	18.7	23.9	30.3	35.9
	Rated Current (A) (*7)		LD	1.3 (1.1)	2 (1.7)	3.5 (3.0)	6.0 (5.1)	9.6 (8.2)	12 (10.2)	19.6 (16.7)	30 (25.5)	40 (34)	56.0 (47.6)	69.0 (58.7)	88.0 (74.8)	115.0 (97.8)
			ND	0.8 (0.8)	1.5 (1.4)	3 (2.5)	5 (4.1)	8 (7)	11 (10)	17.5 (16.5)	24 (23)	33 (31)	47.0 (44.0)	60.0 (57.0)	76.0 (72.0)	90.0 (86.0)
	Overload Current Rating (*3)		LD	120% 60 s, 150% 3 s (inverse-time characteristics) at surrounding air temperature of 50°C												
			ND	150% 60 s, 200% 3 s (inverse-time characteristics) at surrounding air temperature of 50°C												
	Voltage (*4)			Three-phase 200 to 240V												
	Regenerative Braking	Brake Transistor Max. Brake Torque (ND Reference) (*5)		–		Built-in										
				150%		100%		50%	20%							
Power Supply	Rated Input AC (DC) Voltage/Frequency			Three-phase 200 to 240V 50/60 Hz (283 to 339 VDC) (*9)												
	Permissible AC (DC) Voltage Fluctuation			170 to 264V 50/60 Hz (240 to 373 VDC) (*9)												
	Permissible Frequency Fluctuation			±5%												
	Rated Input Current (A) (*8)	Without DC Reactor	LD	1.9	3.0	5.1	8.2	12.5	16.1	25.5	37.1	48.6	74.3	90.5	112.9 1	39.5
		With DC Reactor	ND	1.4	2.3	4.5	7.0	10.7	15.0	23.1	30.5	41.0	63.6	79.9	99.0	114.3
		Without DC Reactor	LD	1.3	2.0	3.5	6.0	9.6	12.0	20.0	30.0	40.0	56.0	69.0	88.0	115.0
		With DC Reactor	ND	0.8	1.5	3.0	5.0	8.0	11.0	17.5	24.0	33.0	47.0	60.0	76.0	90.0
	Power Supply Capacity (kVA) (*6)	Without DC Reactor	LD	0.7	1.1	1.9	3.1	4.8	6.2	9.7	15.0	19.0	29.0	35.0	43.0	54.0
		With DC Reactor	ND	0.5	0.9	1.7	2.7	4.1	5.7	8.8	12.0	16.0	25.0	31.0	38.0	44.0
		Without DC Reactor	LD	0.5	0.8	1.3	2.3	3.7	4.6	7.5	11.0	15.0	21.0	26.0	34.0	44.0
		With DC Reactor	ND	0.3	0.6	1.1	1.9	3.0	4.2	6.7	9.1	13.0	18.0	23.0	29.0	34.0
Protective Structure (IEC 60529)				Open type (IP20)												
Cooling System				Natural				Forced air								
Approx. Weight (kg)				0.5	0.5	0.7	1.0	1.4	1.4	1.8	3.3	3.3	5.4	5.6	11.0	11.0

Notes: For detailed information please reference the product manual.

Three-Phase 400V Class

Model FR-E840-_				0016	0026	0040	0060	0095	0120	0170	0230	0300	0380	0440
				0.4K	0.75K	1.5K	2.2K	3.7K	5.5K	7.5K	11K	15K	18.5K	22K
Stocked Item				S	S	S	S	S	S	S	S	S	S	S
Applicable Motor Capacity (kW) (*1)				0.75	1.5	2.2	3.0	5.5	7.5	11.0	15.0	18.5	22.0	30.0
				0.4	0.75	1.5	2.2	3.7	5.5	7.5	11.0	15.0	18.5	22.0
Output	Rated Capacity (kVA) (*2)			1.6	2.7	4.2	5.3	8.5	13.3	17.5	26.7	31.2	34.3	45.7
				1.2	2.0	3.0	4.6	7.2	9.1	13.0	17.5	22.9	29.0	33.5
	Rated Current (A) (*7)			2.1 (1.8)	3.5 (3.0)	5.5 (4.7)	6.9 (5.9)	11.1 (9.4)	17.5 (14.9)	23.0 (19.6)	35.0 (29.8)	41.0 (34.9)	45.0 (38.3)	60.0 (51.0)
				1.6 (1.4)	2.6 (2.2)	4.0 (3.8)	6.0 (5.4)	9.5 (8.7)	12.0	17.0	23.0	30.0	38.0	44.0
	Overload Current Rating (*3)			120% 60 s, 150% 3 s (inverse-time characteristics) at surrounding air temperature of 50°C										
				150% 60 s, 200% 3 s (inverse-time characteristics) at surrounding air temperature of 50°C										
	Rated Voltage (*4)			Three-phase 380 to 480V										
	Regenerative Braking	Brake Transistor		Built-in										
		Brake Transistor Max. Brake Torque (ND Reference) (*5)		100%		50%	20%							
Power Supply	Rated Input AC (DC) Voltage/Frequency			Three-phase 380 to 480 V 50 Hz / 60 Hz (*9)										
	Permissible AC (DC) Voltage Fluctuation			323 to 528 V 50/60 Hz (457 to 740 VDC) (*9)										
	Permissible Frequency Fluctuation			±5%										
	Rated Input Current (A) (*8)	Without DC Reactor	LD	3.3	6.0	8.9	10.7	16.2	24.9	32.4	46.7	54.2	59.1	75.6
		With DC Reactor		2.7	4.4	6.7	9.5	14.1	17.8	24.7	32.1	41.0	50.8	57.3
		Without DC Reactor	ND	2.1	3.5	5.5	6.9	11.0	18.0	23.0	35.0	41.0	45.0	60.0
		With DC Reactor		1.6	2.6	4.0	6.0	9.5	12.0	17.0	23.0	30.0	38.0	44.0
	Power Supply Capacity (kVA) (*6)	Without DC Reactor	LD	2.5	4.5	6.8	8.2	12.4	19.0	25.0	36.0	42.0	45.0	58.0
		With DC Reactor		2.1	3.4	5.1	7.2	10.8	14.0	19.0	25.0	32.0	39.0	44.0
		Without DC Reactor	ND	1.6	2.7	4.2	5.3	8.5	13.0	18.0	27.0	31.0	34.0	46.0
		With DC Reactor		1.2	2.0	3.0	4.6	7.2	9.1	13.0	18.0	23.0	29.0	34.0
Protective Structure (IEC 60529)				Open type (IP20)										
Cooling System				Natural		Forced air								
Approx. Weight (kg)				1.2	1.2	1.4	1.8	1.8	2.4	2.4	4.8	4.9	11.0	11.0

Notes:

1. The applicable motor capacity indicated is the maximum capacity applicable for use of the Mitsubishi Electric standard 4-pole motor. To drive a Mitsubishi Electric high-performance energy-saving motor, use the 200 V class 0.75K inverter for a 1.1 kW motor, or 200/400 V class 2.2K inverter for a 3 kW motor.
2. The rated output capacity indicated assumes that the output voltage is 230 V for three-phase 200 V class and 440 V for three-phase 400 V class.
3. The % value of the overload current rating indicated is the ratio of the overload current to the inverter's rated output current. For repeated duty, allow time for the inverter and motor to return to or below the temperatures under 100% load.
4. The maximum output voltage does not exceed the power supply voltage. The maximum output voltage can be changed within the setting range. However, the pulse voltage value of the inverter output side voltage remains unchanged at about√2 that of the power supply.
5. The braking torque indicated is a short-duration average torque (which varies with motor loss) when the motor alone is decelerated from 60 Hz in the shortest time and is not a continuous regenerative torque. When the motor is decelerated from the frequency higher than the base frequency, the average deceleration torque will reduce. Since the inverter does not contain a brake resistor, use the optional brake resistor when regenerative energy is large. A brake unit (FR-BU2) may also be used. (Option brake resistor cannot be used for 0.1K and 0.2K.)
6. The power supply capacity varies with the value of the power supply side inverter impedance (including those of the input reactor and cables).
7. Setting 2 kHz or more in Pr. 72 PWM frequency selection to perform low acoustic noise operation in the surrounding air temperature exceeding 40°C, the rated output current is the value in parenthesis.
8. The rated input current is the value when at the rated output current. The input power impedances (including those of the input reactor and cables) affect the value.
9. Connect the DC power supply to the inverter terminals P/+ and N/-. Connect the positive terminal of the power supply to terminal P/+ and the negative terminal to terminal N/-.
   - When the energy is regenerated from the motor, the voltage between terminals P/+ and N/- may temporarily rise to 415 V or more. Use a DC power supply resistant to the regenerative voltage/energy. When a power supply that cannot resist the regenerative voltage/energy is used, connect a reverse current prevention diode in series.
   - Powering ON produces up to four times as large current as the inverter rated current. Prepare a DC power supply resistant to the inrush current at power ON, although an inrush current limit circuit is provided in the FR-E800 series inverter.
   - The power capacity depends on the output impedance of the power supply. Select a power capacity around the AC power supply capacity.

Three-Phase 600V Class

Model FR-E860-_				0017	0027	0040	0061	00900	0120
				0.75K	1.5k	2.2K	3.7K	5.5K	7.5K
Stocked Item				S	S	S	S	S	S
Applicable Motor Capacity (kW) (*1)			LD	1.5	2.2	3.7	5.5	7.5	11
			ND	0.75	1.5	2.2	3.7	5.5	7.5
Output	Rated Capacity (kVA) (*2)		LD	2.5	3.6	5.6	8.2	11.0	15.9
			ND	1.7	2.7	4.0	6.1	9.0	12.0
	Rated Current (A) (*7)		LD	2.5 (2.1)	3.6 (3.0)	5.6 (4.8)	8.2 (7.0)	11 (9.0)	16 (13.6)
			ND	1.7	2.7	4	6.1	9	12
	Overload Current Rating (*3)		LD	120% 60 s, 150% 3 s (inverse-time characteristics) at surrounding air temperature of 50°C					
			ND	150% 60 s, 200% 3 s (inverse-time characteristics) at surrounding air temperature of 50°C					
	Rated Voltage (*4)			Three-phase 525 to 600 V					
	Regenerative Braking	Brake Transistor		Built-in					
		Maximum Brake Torque (ND Reference) (*5)		100%	50%	20%			
Power Supply	Rated Input AC Voltage/Frequency			Three-phase 575V 50 60 Hz					
	Permissible AC Voltage Fluctuation			490 to 632V 60 Hz					
	Permissible Frequency Fluctuation			±5%					
	Rated Input Current (A) (*8)	Without DC Reactor	LD	4.3	5.9	8.9	12.4	15.9	22.4
		With DC Reactor	ND	3.0	4.6	6.6	9.5	13.3	17.4
		Without DC Reactor	LD	2.5	3.6	5.6	8.2	11.0	16.0
		With DC Reactor	ND	1.7	2.7	4.0	6.1	9.0	12.0
	Power Supply Capacity (kVA) (*6)	Without DC Reactor	LD	4.3	5.9	8.9	12.3	16.0	23.0
		With DC Reactor	ND	3.0	4.6	6.6	9.5	14.0	18.0
		Without DC Reactor	LD	2.5	3.6	5.6	8.2	11.0	16.0
		With DC Reactor	ND	1.7	2.7	4.0	6.1	9.0	12.0
Protective Structure (IEC 60529)				Enclosed type (IP20)					
Cooling System				Natural				Forced air	
Approx. Weight (kg)				1.9	1.9	1.9	2.4	2.4	2.4

Notes:
1. The motor capacity indicates the maximum capacity of a 4-pole standard motor driven by all of the inverters in parallel connection.
2. The rated output capacity indicated assumes that the output voltage is 575 V.
3. The % value of the overload current rating indicated is the ratio of the overload current to the inverter's rated output current. For repeated duty, allow time for the inverter and motor to return to or below the temperatures under 100% load.
4. The maximum output voltage does not exceed the power supply voltage. The maximum output voltage can be changed within the setting range. However, the pulse voltage value of the inverter output side voltage remains unchanged at about √2 that of the power supply.
5. The amount of braking torque is the average short-term torque (which varies depending on motor loss) that is generated when a motor decelerates in the shortest time by itself from 60 Hz. It is not continuous regenerative torque. The average deceleration torque becomes lower when a motor decelerates from a frequency higher than the base frequency. The inverter is not equipped with a built-in brake resistor. Use a brake resistor for an operation with large regenerative power. A brake unit can also be used.
6. The power supply capacity varies with the value of the power supply side inverter impedance (including those of the input reactor and cables).
7. Setting 2 kHz or more in Pr. 72 PWM frequency selection to perform low acoustic noise operation in the surrounding air temperature exceeding 40°C, the rated output current is the value in parenthesis.
8. The rated input current indicates a value at a rated output voltage. The impedance at the power supply side (including those of the input reactor and cables) affects the rated input current.

Single-Phase 200V Class

Model E820S-_				0008	0015	0030	0050	0080	0110
				0.1K	0.2K	0.4K	0.75K	1.5K	2.2K
Stocked Item				S	S	S	S	S	S
Applicable Motor Capacity (kW) (*1)			ND	0.1	0.2	0.4	0.75	1.5	2.2
Output	Rated Capacity (kVA) (*2)		ND	0.3	0.6	1.2	2.0	3.2	4.4
	Rated Current (A) (*7)		ND	0.8 (0.8)	1.5 (1.4)	3.0 (2.5)	5.0 (4.1)	8.0 (7.0)	11.0 (10.0)
	Overload Current Rating (*3)		ND	150% 60 s, 200% 3 s (inverse-time characteristics) at surrounding air temperature of 50°C					
	Rated Voltage (*4)			Three-phase 200 to 240 V					
	Regenerative Braking	Brake Transistor		Not installed		Built-in			
		Maximum Brake Torque (ND Reference) (*5)		150%		100%		50%	20%
Power Supply	Rated Input AC Voltage/Frequency			Single-phase 200 to 240 V 50/60 Hz					
	Permissible AC Voltage Fluctuation			170 to 264 V, 50/60 Hz					
	Permissible Frequency Fluctuation			±5%					
	Rated Input Current (A) (*8)	Without DC Reactor	ND	2.3	4.1	7.9	11.2	17.9	25.0
		With DC Reactor		1.4	2.6	5.2	8.7	13.9	19.1
	Power Supply Capacity (kVA) (*6)	Without DC Reactor	ND	0.5	0.9	1.7	2.5	3.9	5.5
		With DC Reactor		0.3	0.6	1.1	1.9	3.0	4.2
Protective Structure (IEC 60529)				Open type (IP20)					
Cooling System				Natural				Forced air	
Approx. Weight (kg)				0.5	0.5	0.8	1.3	1.4	1.9

Notes:
1. The motor capacity indicates the maximum capacity of a standard 4-pole motor driven by all of the inverters in parallel connection.
2. The rated output capacity indicated assumes that the output voltage is 230 V.
3. The % value of the overload current rating indicated is the ratio of the overload current to the inverter's rated output current. For repeated duty, allow time for the inverter and motor to return to or below the temperatures under 100% load. For single-phase power input model, the bus voltage decreases to power failure detection level and the load of 100% or higher may not be available if the automatic restart after instantaneous power failure function (Pr.57) or the power failure stop function (Pr.261) is set and power supply voltage is low while the load increases
4. The maximum output voltage does not exceed the power supply voltage. The maximum output voltage can be changed within the setting range. However, the pulse voltage value of the inverter output side voltage remains unchanged at about√2 that of the power supply.
5. The amount of braking torque is the average short-term torque (which varies depending on motor loss) that is generated when a motor decelerates in the shortest time by itself from 60 Hz. It is not continuous regenerative torque. The average deceleration torque becomes lower when a motor decelerates from a frequency higher than the base frequency. The inverter is not equipped with a built-in brake resistor. Use a brake resistor for an operation with large regenerative power. (not available for FRE820S 0008(0.1K), FR-E820S-0015(0.2K), FR-E810W-0008(0.1K), and FR-E810W-0015(0.2K).) A brake unit can be also used.
6. The power supply capacity varies with the value of the power supply side inverter impedance (including those of the input reactor and cables).
7. Setting 2 kHz or more in Pr. 72 PWM frequency selection to perform low acoustic noise operation in the surrounding air temperature exceeding 40°C, the rated output current is the value in parenthesis.
8. The rated input current indicates a value at a rated output voltage. The impedance at the power supply side (including those of the input reactor and cables) affects the rated input current.
9. For the single-phase 100 V power input models, the maximum output voltage is twice the amount of the power supply voltage.
10. For the single-phase 100 V power input models, output voltage decreases by applying motor load, and output current increases compared to the three-phase power input models. The load must be reduced so that output current does not exceed the rated motor current.

Single-Phase 100V Class

Model E810W-_			0008	0015	0030	0050
			0.1K	0.2K	0.4K	0.75K
Stocked Item			S	S	S	S
Applicable Motor Capacity (kW) (*1)		ND	0.1	0.2	0.4	0.75
Output	Rated Capacity (kVA) (*2)	ND	0.3	0.6	1.2	2
	Rated Current (A) (*7)	ND	0.8 (0.8)	1.5 (1.4)	3.0 (2.5)	5.0 (4.1)
	Overload Current Rating (*3)	ND	150% 60 s, 200% 3 s (inverse-time characteristics) at surrounding air temperature of 50°C			
	Rated Voltage (*9, *10)		Three-phase 200 to 240 V			
	Regenerative Braking	Brake Transistor	Not installed		Built-in	
		Maximum Brake Torque (ND Reference) (*5)	150%		100%	
Power Supply	Rated Input AC Voltage/Frequency		Single-phase 100 to 120 V 50/60 Hz			
	Permissible AC Voltage Fluctuation		90 to 132 V, 50/60 Hz			
	Permissible Frequency Fluctuation		±5%			
	Rated Input Current (A)	ND	3.7	6.8	12.4	19.6
Protective Structure (IEC 60529)			Open type (IP20)			
Cooling System			Natural			
Approx. Weight (kg)			0.5	0.6	0.8	1.4

Notes:
1. The motor capacity indicates the maximum capacity of a standard 4-pole motor driven by all of the inverters in parallel connection.
2. The rated output capacity indicated assumes that the output voltage is 230 V.
3. The % value of the overload current rating indicated is the ratio of the overload current to the inverter's rated output current. For repeated duty, allow time for the inverter and motor to return to or below the temperatures under 100% load. For single-phase power input model, the bus voltage decreases to power failure detection level and the load of 100% or higher may not be available if the automatic restart after instantaneous power failure function (Pr.57) or the power failure stop function (Pr.261) is set and power supply voltage is low while the load increases
4. The maximum output voltage does not exceed the power supply voltage. The maximum output voltage can be changed within the setting range. However, the pulse voltage value of the inverter output side voltage remains unchanged at about√2 that of the power supply.
5. The amount of braking torque is the average short-term torque (which varies depending on motor loss) that is generated when a motor decelerates in the shortest time by itself from 60 Hz. It is not continuous regenerative torque. The average deceleration torque becomes lower when a motor decelerates from a frequency higher than the base frequency. The inverter is not equipped with a built-in brake resistor. Use a brake resistor for an operation with large regenerative power. (not available for FRE820S 0008(0.1K), FR-E820S-0015(0.2K), FR-E810W-0008(0.1K), and FR-E810W-0015(0.2K).) A brake unit can be also used.
6. The power supply capacity varies with the value of the power supply side inverter impedance (including those of the input reactor and cables).
7. Setting 2 kHz or more in Pr. 72 PWM frequency selection to perform low acoustic noise operation in the surrounding air temperature exceeding 40°C, the rated output current is the value in parenthesis.
8. The rated input current indicates a value at a rated output voltage. The impedance at the power supply side (including those of the input reactor and cables) affects the rated input current.
9. For the single-phase 100 V power input models, the maximum output voltage is twice the amount of the power supply voltage.
10. For the single-phase 100 V power input models, output voltage decreases by applying motor load, and output current increases compared to the three-phase power input models. The load must be reduced so that output current does not exceed the rated motor current.

Common Specifications

Control Specifications	Control Method		Soft-PWM control/high carrier frequency PWM control
		Induction Motor	Selectable among V/F control, Advanced magnetic flux vector control, and Real sensorless vector control
		PM Motor	PM sensorless vector control
	Output Frequency Range	Induction Motor	0.2 to 590 Hz (The upper-limit frequency is 400 Hz under Advanced magnetic flux vector control and Real sensorless vector control.)
		PM Motor	0.2 to 400 Hz (not operable at maximum motor frequency or higher)
	Frequency Setting Resolution	Analog Input	0.015 Hz /60 Hz at 0 to 10V / 12 bits (terminals 2 and 4) 0.03 Hz /60 Hz at 0 to 5V / 11 bits or 0 to 20 mA / 11 bits (terminals 2 and 4)
		Digital Input	0.01 Hz
	Frequency Accuracy	Analog Input	Within ±0.2% of the max. output frequency (25°C ± 10°C)
		Digital Input	Within 0.01% of the set output frequency
	Voltage/Frequency Characteristics		Base frequency can be set from 0 to 590 Hz. Constant-torque/variable torque pattern can be selected. (Available with induction motors only)
	Starting Torque	Induction Motor	150% 0.5 Hz (Advanced magnetic flux vector control) 200% 0.3 Hz (0.4K to 3.7K), 150% 0.3 Hz (5.5K or more) (Real sensorless vector control)
		PM Motor	50%
	Torque Boost		Manual torque boost (available with induction motors only)
	Acceleration/Deceleration Time Setting		0 to 3600 s (acceleration and deceleration can be set individually), linear or S-pattern acceleration/deceleration mode
	DC Injection Brake	Induction Motor	Operation frequency (0 to 120 hz), operation time (0 to 10 s), operation voltage (0 to 30%) can be changed.
		PM Motor	Operation time (0 to 10 s) can be changed, operation voltage (operating current) is fixed.
	Stall Prevention Operation Level		Operation current level can be set (0 to 220% adjustable), whether to use the function or not can be selected.
	Torque Limit Level		Torque limit value can be set (0 to 400% variable)
Operation Specifications	Frequency Setting Signal	Analog Input	Terminals 2 and 4: 0 to 10V, 0 to 5V, 4 to 20 mA (0 to 20 mA) are available.
		Digital Input	Input using the operation panel. Four-digit BCD or 15-bit binary (when used with option FR-A8AX E kit)
	Start Signal		Forward and reverse rotation or start signal automatic self-holding input (3-wire input) can be selected.
	Input Signal (Standard Model: 7, Ethernet Model: 2)		Low-speed operation command, Middle-speed operation command, High-speed operation command, Output stop, Forward rotation command, Reverse rotation command, Inverter reset the input signal can be changed using Pr.178 to Pr.189 (input terminal function section).
	Operational Functions		Maximum and minimum frequency settings, multi-speed operation, acceleration/deceleration pattern, thermal protection, DC injection brake, starting frequency, JOG operation, output stop (MR3), stall prevention, regeneration avoidance, frequency jump, rotation display, automatic restart after instantaneous power failure, remote setting, automatic acceleration/deceleration, retry function, carrier frequency selection, fast-response current limit, forward/reverse rotation prevention, operation mode selection, slip compensation, droop control, speed smoothing control, traverse, auto tuning, applied motor selection, R3-485 communication (*1), Ethernet communication (*2), PID control, easy dancer control, cooling fan operation selection, stop selection (deceleration stop/coasting), power-failure deceleration stop function, stop-on-contact control, Plc function, life diagnosis, maintenance timer, current average monitor, multiple rating, speed control, torque control, torque limit, safety stop function
	Output Signal	Open Collector Output (Standard Model: 2) Relay Output 1	Inverter running, Up to frequency, Fault The output signal can be changed using Pr.190 to Pr.196 (output terminal function selection)
		Analog Output (AM Type)	-10 to _10 V /12 bits
Protective/Warning Function		Protective Functions	Overcurrent trip during acceleration, Overcurrent trip during constant speed, Overcurrent trip during deceleration or stop, Regenerative overvoltage trip during acceleration, Regenerative overvoltage trip during constant speed, Regenerative overvoltage trip during deceleration or stop, Inverter overload trip, Motor overload trip, Heat sink overheat, Undervoltage, Input phase loss, Stall prevention stop, Loss of synchronism detection (*3), Upper limit fault detection, Lower limit fault detection, Brake transistor alarm detection, Output side earth (ground) fault overcurrent, Output short circuit, Output phase loss, external thermal relay operation, Option fault, Communication option fault, Parameter storage device fault, PU disconnection, Retry count excess, CPU fault, Abnormal output current detection, Inrush current limit circuit fault, USB communication fault, analog input error, Safety circuit fault, Overspeed occurrence (*3), Speed deviation excess detection (*3), Brake sequence fault (*3), PID signal fault, Ethernet communication fault (*2), Opposite rotation deceleration fault (*3), internal circuit fault, User definition error by the PLC function, Board combination mismatch
		Warning Functions	Fan alarm, Stall prevention (overcurrent), Stall prevention (overvoltage), Regenerative brake pre-alarm (*3), Electronic thermal relay function pre-alarm, PU stop, Maintenance timer warning, Parameter write error, Operation panel lock (*3), Password locked, Speed limit indication, Safety stop, Ethernet communication fault (*2), Duplicate IP address (*2), IP address fault (*2), Incorrect parameter setting
Environment	Surrounding Air Temperature		-20°C to +60°C (-10°C to +60°C for the 600V class) (The rated current must be reduced at a temperature above 50°C.)
	Ambient Humidity		95% RH or less (non-condensing) (With circuit board coating (conforming to IEC 60721-3-3 3C2)) 90% RH or less (non-condensing) (Without circuit board coating)
	Storage Temperature (*4)		-40°C to +70°C
	Atmosphere		Indoors (without corrosive gas, flammable gas, oil mist, dust and dirt, etc.)
	Altitude/Vibration (*5)		Maximum 3000m (Maximum 2000m for the 600V class), 5.9m/s² or less at 10 to 55 Hz (directions of X, Y, Z areas)

Notes:
1. Enabled only for standard models.
2. Enabled only for Ethernet models.
3. This protective function is not available in the initial status.
4. Temperature applicable for a short time, e.g. in transit.
5. For the installation at an altitude above 1000m, consider a 3% reduction in the rated current per 500m increase in altitude.

Terminal Connection Diagram FR-E800

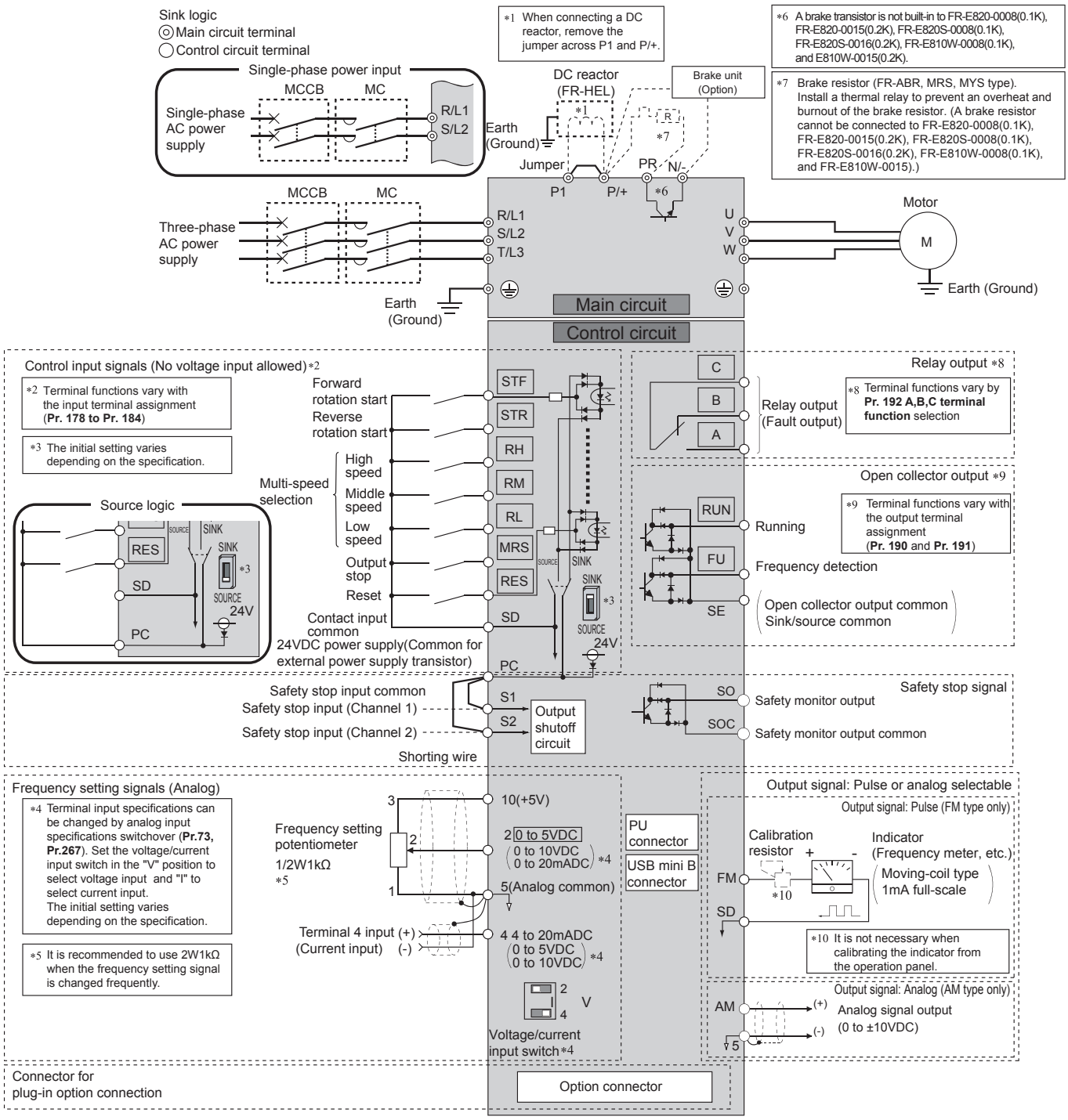

Terminal Specifications FR-E800

Type		Terminal Symbol	Terminal Name	Description		
Main Circuit		R/L1, S/L2, T/L3 (*1)	AC Power Input	Connect to the commercial power supply. Do not connect anything to these terminals when using the high power factor converter (FR-HC2) or the multifunction regeneration converter (FR-XC) in common bus regeneration mode.		
		U, V, W	Inverter Output	Connect a three-phase squirrel-cage motor or PM motor.		
		P/+, PR	Brake Resistor Connection	Connect a brake resistor (MRS type, MYS type, FR-ABR) across terminals P/+-PR. (A brake resistor cannot be connected to the 0.1K or 0.2K)		
		P/+, N/-	Brake Unit Connection	Connect the brake unit (FR-BU2), multifunction regeneration converter (FR-XC), or high power factor converter (FR-HC2).		
		P/+, P1	DC Reactor Connection	Remove the jumper across terminals P/+-P1 and connect a DC reactor. When a DC reactor is not connected, the jumper across terminals P/+ and P1 should not be removed.		
		⏚	Earth (Ground)	For earthing (grounding) the inverter chassis. Must be earthed (grounded).		
Input Signal	Contact Input	STF (*2)	Forward Rotation Start	Turn on the STF signal to start forward rotation and turn it off to stop.	When the STF and STR signals are turned on simultaneously, the stop command is given.	Input resistance: 4.7Ω, voltage when contacts are open: 21 to 26 VDC, current when contacts are short-circuited: 4 to 6 mADC
		STR (*2)	Reverse Rotation Start	Turn on the STR signal to start reverse rotation and turn it off to stop.		
		RH, RM, RL (*2)	Multi-speed Selection	Multi-speed can be selected according to the combination of RH, RM and RL signals.		
		MRS (*2)	Output Stop	Turn on the MRS signal (20ms or more) to stop the inverter output. Use to shut off the inverter output when stopping the motor by electromagnetic brake.		
		RES (*2)	Reset	Use to reset alarm output provided when protective circuit is activated. Turn on the RES signal for more than 0.1s, then turn it off. It is possible to set the initial setting to "always enabled". By setting Pr. 75, reset can be set enabled only at fault occurrence. Recover about 1s after reset is canceled.		
	Frequency Setting	10	Frequency Setting Power Supply	Used as power supply when connecting potentiometer for frequency setting (speed setting) from outside of the inverter.		5 VDC ± 0.5 V permissible load current 10 mA
		2	Frequency Setting (Voltage)	Inputting 0 to 5 VDC (or 0 to 10 VDC) provides the maximum output frequency at 5 V (or 10 V) and makes input and output proportional. Use Pr.73 to switch between input 0 to 5 VDC (initial setting) and 0 to 10 VDC input. Set the voltage/current input switch to the "I" position to select current input (0 to 20 mA).		Voltage input: Input resistance 10 kΩ ± 1 kΩ Permissible maximum voltage 20 VDC Current input: Input resistance 245Ω ± 5Ω Maximum permissible current 30 mA.
		4	Frequency Setting (Current)	Inputting 4 to 20 mADC (or 0 to 5 VDC, 0 to 10 VDC) provides the maximum output frequency at 20 mA and makes input and output proportional. This input signal is valid only when the AU signal is ON (terminal 2 input is invalid). To use the terminal 4 (current input at initial setting), assign "4" to any parameter from Pr.178 to Pr.184 (Input terminal function selection) before turning ON the AU signal. Use Pr.267 to switch among input 4 to 20 mA (initial setting), 0 to 5 VDC, and 0 to 10 VDC. Set the voltage/current input switch in the "V" position to select voltage input (0 to 5 V / 0 to 10 V).		
Output Signal	Relay	A, B, C	Relay Output (Fault Output)	1 changeover contact output indicates that the inverter fault occurs. Fault: discontinuity across B-C (continuity across A-C), Normal: continuity across B-C (discontinuity across A-C)		Contact capacity 240 VAC 2A (power factor = 0.4) 30 VDC 1A
	Open Collector	RUN	Inverter Running	The output is in LOW state when the inverter output frequency is equal to or higher than the starting frequency (initial value: 0.5 Hz). The output is in HIGH state during stop or DC injection brake operation. (*3)		Permissible load 24 VDC (Maximum 27 VDC) 0.1 A (a voltage drop is 3.4 V maximum when the signal is on)
		FU	Frequency Detection	The output is in LOW state when the inverter output frequency is equal to or higher than the preset detection frequency, and is in HIGH state when it is less than the preset detection frequency.(*3)		
	Pulse	FM (*4)	For Meter	Select one e.g. output frequency from monitor items. (Not output during inverter reset.) The output signal is proportional to the magnitude of the corresponding monitoring item	Output item: output frequency (initial setting)	Permissible load current 1 mA 1440 pulses/s at 60 Hz
	Analog	AM (*4)	Analog Voltage Output			Output signal 0 to 0 VDC, permissible load current 1 mA (load impedance 10 kΩ or more), resolution: 12 bits
Safety Stop Signal		S1	Safety Stop Input (Channel 1)	Terminals S1 and S2 are used for the safety stop input signal for the safety relay module. Terminals S1 and S2 are used at the same time (dual channel). Inverter output is shut off by shortening/opening between terminals S1 and SIC, or between S2 and SIC. In the initial status, terminals S1 and S2 are shorted with terminal PC by shorting wires. Terminal SIC is shorted with terminal SD. Remove the shorting wires and connect the safety relay module when using the safety stop function.		Input resistance 4.7 kΩ Voltage when contacts are open 21 to 26 VDC Current when contacts are short-circuited 4 to 6 mADC
		S2	Safety Stop Input (With 24 VDC Input) (Channel 2)			
		SO	Safety Monitor Output (Open Collector Output)	Indicates the safety stop input signal status. Switched to LOW when the status is other than the internal safety circuit failure. Refer to the FR-E800 Instruction Manual (Functional Safety) (BCN-A23488-000) when the signal is switched to HIGH while both terminals S1 and S2 are open. (Please contact your sales representative for the manual.)		Permissible load 24 VDC (max. 27 VDC) 0.1 A (The voltage drop is 3.4 V at maximum while the signal is ON.)

Continued next page

Terminal Specifications FR-E800 (CONTINUED)

Common Terminal	SD	Contact Input Common (Sink) (Initial Setting)	Common terminal for contact input terminal (sink logic) and terminal FM.	
		External Transistor Common (Source)	Connect this terminal to the power supply common terminal of a transistor output (open collector output) device, such as a programmable controller, in the source logic to avoid malfunction by undesirable currents.	
		24VDC Power Supply Common	Common output terminal for 24VDC 0.1A power supply (PC terminal). Isolated from terminals 5 and SE.	
	PC	External Transistor Common (Sink) (Negative Common)	Connect this terminal to the power supply common terminal of a transistor output (open collector output) device, such as a programmable controller, in the sink logic to avoid malfunction by undesirable currents.	Power supply voltage range: 22.5 to 27 VDC, permissible load current: 100 mA
		Safety Stop Input Terminal Common	Common terminal for safety stop input terminals.	
		Contact Input Common (Source) (Positive Common)	Common terminal for contact input terminal (source logic).	
		24VDC Power Supply	Can be used as 24 VDC 0.1 A power supply.	
	5	Frequency Setting Common	Common terminal for the frequency setting signals (terminals 2 or 4). Do not earth (ground).	
	SE	Open Collector Output Common	Common terminal of terminal RUN and FU.	
	SOC	Safety Monitor Output Terminal Common	Common terminal for terminal SO.	
Communication	–	PU Connector	With the PU connector, RS-485 communication can be made. Conforming standard: EIA-485 (RS-485) Transmission format: Multi-drop link Communication speed: 300 to 115200bps Overall extension: 500m	
	–	USB Connector (*5)	USB connection with a personal computer can be established. Setting, monitoring and testing of the inverter can be performed using FR Configurator2. Interface: conforms to USB 1.1 Transmission Speed: 12 Mbps Connector: USB mini B connector (receptacle mini B type)	

Notes:
1. Terminal T/L3 is not available for the single-phase power input models.
2. Terminal functions can be selected using Pr.178 to Pr.184 (Input terminal function selection).
3. An open collector transistor is ON (conductive) in LOW state. The transistor is OFF (not conductive) in HIGH state.
4. Terminal FM is provided for the FM type inverter. Terminal AM is provided for the AM type inverter.
5. USB bus power connection is available. The maximum SCCR is 500 mA. A PU connector cannot be used during USB bus power connection.

Terminal Connection Specifications FR-E800-E

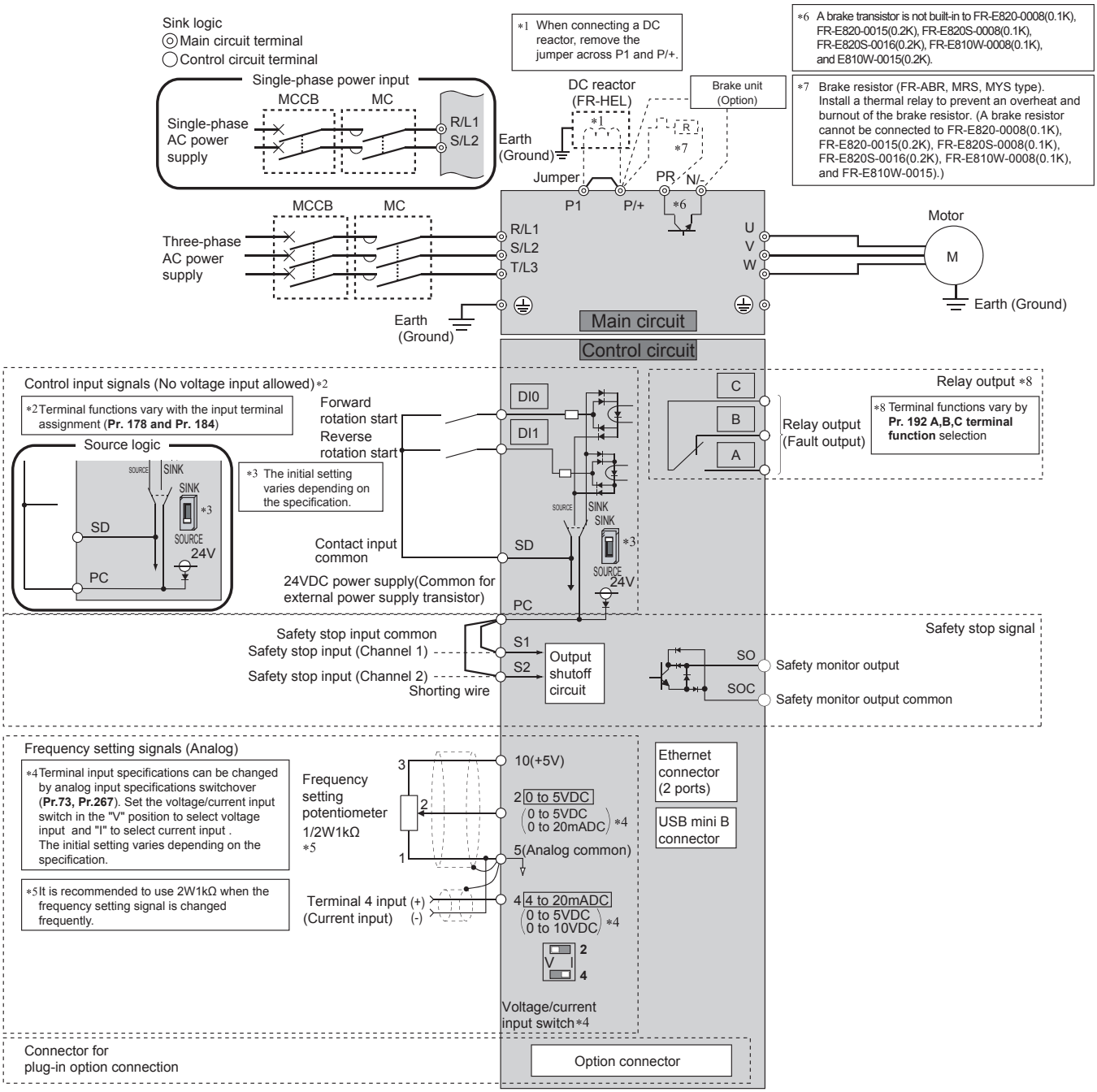

Terminal Specifications FR-E800-E

Type		Terminal Symbol	Terminal Name	Description		
Main Circuit		R/L1, S/ L2, T/L3	AC Power Input	Connect to the commercial power supply. Do not connect anything to these terminals when using the high power factor converter (FR-HC2) or the multifunction regeneration converter (FR-XC) in common bus regeneration mode.		
		U, V, W	Inverter Output	Connect a three-phase squirrel-cage motor or PM motor.		
		P/+, PR	Brake Resistor Connection	Connect a brake resistor (MRS type, MYS type, FR-ABR) across terminals P/+-PR. (A brake resistor cannot be connected to the 0.1K or 0.2K)		
		P/+, N/-	Brake Unit Connection	Connect the brake unit (FR-BU2), multifunction regeneration converter (FR-XC), or high power factor converter (FR-HC2).		
		P/+, P1	DC Reactor Connection	Remove the jumper across terminals P/+-P1 and connect a DC reactor. When a DC reactor is not connected, the jumper across terminals P/+ and P1 should not be removed.		
		⏚	Earth (Ground)	For earthing (grounding) the inverter chassis. Must be earthed (grounded).		
Input Signal	Contact Input	DI0 (*2)	Forward Rotation Start	Turn on the DI0 signal to start forward rotation and turn it off to stop.	When the DI0 and DI1 signals are turned on simultaneously, the stop command is given.	Input resistance: 4.7Ω, voltage when contacts are open: 21 to 26 VDC, current when contacts are short-circuited: 4 to 6 mADC
		DI1 (*2)	Reverse Rotation Start	Turn on the DI1 signal to start reverse rotation and turn it off to stop.		
	Frequency Setting	10	Frequency Setting Power Supply	Used as power supply when connecting potentiometer for frequency setting (speed setting) from outside of the inverter.		5 VDC ± 0.5 V permissible load current 10 mA
		2	Frequency Setting (Voltage)	Inputting 0 to 5 VDC (or 0 to 10 VDC) provides the maximum output frequency at 5 V (or 10 V) and makes input and output proportional. Use Pr.73 to switch between input 0 to 5 VDC (initial setting) and 0 to 10 VDC input. Set the voltage/ current input switch to the "I" position to select current input (0 to 20 mA).		Voltage input: Input resistance 10 kΩ ± 1 kΩ Permissible maximum voltage 20 VDC Current input: Input resistance 245Ω ± 5Ω Maximum permissible current 30 mA.
		4	Frequency Setting (Current)	Inputting 4 to 20 mADC (or 0 to 5 VDC, 0 to 10 VDC) provides the maximum output frequency at 20 mA and makes input and output proportional. This input signal is valid only when the AU signal is ON (terminal 2 input is invalid). To use the terminal 4 (current input at initial setting), assign "4" to any parameter from Pr.178 to Pr.184 (Input terminal function selection) before turning ON the AU signal. Use Pr.267 to switch between input 4 to 20 mA (initial setting), 0 to 5 VDC, and 0 to 10 VDC. Set the voltage/current input switch in the "V" position to select voltage input (0 to 5 V / 0 to 10 V).		
Output Signal	Relay	A, B, C	Relay Output (Fault Output)	1 changeover contact output indicates that the inverter fault occurs. Fault: discontinuity across B-C (continuity across A-C), Normal: continuity across B-C (discontinuity across A-C)		Contact capacity 240 VAC 2 A (power factor = 0.4) 30 VDC 1 A
Safety Stop Signal		S1	Safety Stop Input (Channel 1)	Terminals S1 and S2 are used for the safety stop input signal for the safety relay module. Terminals S1 and S2 are used at the same time (dual channel). Inverter output is shut off by shortening/opening between terminals S1 and SIC, or between S2 and SIC. In the initial status, terminals S1 and S2 are shorted with terminal PC by shorting wires. Terminal SIC is shorted with terminal SD. Remove the shorting wires and connect the safety relay module when using the safety stop function.		Input resistance 4.7 kΩ Voltage when contacts are open 21 to 26 VDC Current when contacts are short-circuited 4 to 6 mADC
		S2	Safety Stop Input (With 24 VDC Input) (Channel 2)			
		SO	Safety Monitor Output (Open Collector Output)	Indicates the safety stop input signal status. Switched to LOW when the status is other than the internal safety circuit failure. Switched to HIGH during the internal safety circuit failure status. (LOW is when the open collector output transistor is ON (conducted). HIGH is when the transistor is OFF (not conducted).) Refer to the FRE800 Instruction Manual (Functional Safety) (BCN-A23488-000) when the signal is switched to HIGH while both terminals S1 and S2 are open. (Please contact your sales representative for the manual.)		Permissible load 24 VDC (maximum 27 VDC) 0.1 A (The voltage drop is 3.4 V at maximum while the signal is ON.)
Common Terminal		SD	Contact Input Common (sink) (Negative Common)	Common terminal for contact input terminal (sink logic).		
			External Transistor Common (Source) (Positive Common)	Connect this terminal to the power supply common terminal of a transistor output (open collector output) device, such as a programmable controller, in the source logic to avoid malfunction by undesirable current.		
			24 VDC Power Supply Common	Common output terminal for 24VDC 0.1A power supply (PC terminal). Isolated from terminals 5 and SE.		
		PC	External Transistor Common (Sink) (Negative Common)	Connect this terminal to the power supply common terminal of a transistor output (open collector output) device, such as a programmable controller, in the sink logic to avoid malfunction by undesirable currents.		Power supply voltage range: 22.5 to 26.5 VDC, permissible load current: 100 mA
			Safety Stop Input Terminal Common	Common terminal for safety stop input terminals.		
			Contact Input Common (Source) (Positive Common)	Common terminal for contact input terminal (source logic).		
			24 VDC Power Supply	Can be used as 24 VDC 0.1 A power supply.		
		5	Frequency Setting Common	Common terminal for the frequency setting signals (terminals 2 or 4). Do not earth (ground).		
		SOC	Safety Monitor Output Terminal Common	Common terminal for terminal SO.		
Communication		–	Ethernet Connector (2-Port) (*3)	Communication can be made via Ethernet. Category: 100BASE-TX/10BASE-T • Data transmission speed: 100 Mbps (100BASE-TX) / 10 Mbps (10BASE-T) • Transmission method: Baseband • Maximum segment length: 100m between the hub and the inverter • Number of cascade connection stages: Up to 2 (100BASE-TX) / up to 4 (10BASE-T) • Interface: RJ-45 Number of interfaces available: 2 • IP version: IPv4		
		–	USB Connector (*4)	USB connection with a personal computer can be established. Setting, monitoring and testing of the inverter can be performed using FR Configurator2: Interface: conforms to USB 1.1 • Transmission Speed: 12 Mbps • Connector: USB mini B connector (receptacle mini B type)		

Notes:
1. Terminal T/L3 is not available for the single-phase power input models.
2. Terminal functions can be selected using Pr.178, Pr.179 (Input terminal function selection).
3. Do not connect the parameter unit. The inverter may be damaged.
4. USB bus power connection is available. The maximum SCCR should be 500 mA.

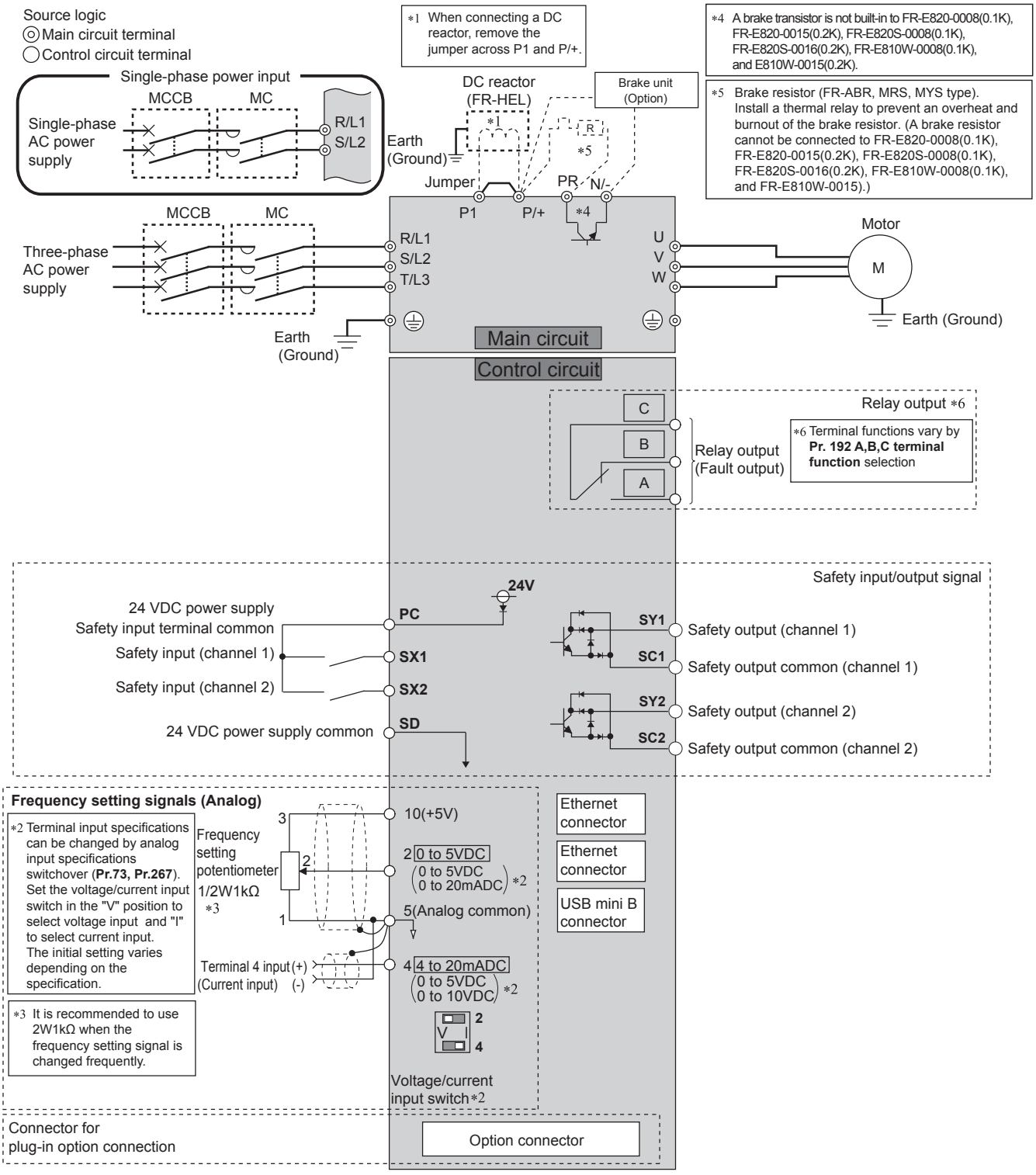

*1 When connecting a DC reactor, remove the jumper across P1 and P/+.

*4 A brake transistor is not built-in to FR-E820-0008(0.1K), FR-E820-0015(0.2K), FR-E820S-0008(0.1K), FR-E820S-0016(0.2K), FR-E810W-0008(0.1K), and E810W-0015(0.2K).

*5 Brake resistor (FR-ABR, MRS, MYS type). Install a thermal relay to prevent an overheat and burnout of the brake resistor. (A brake resistor cannot be connected to FR-E820-0008(0.1K), FR-E820-0015(0.2K), FR-E820S-0008(0.1K), FR-E820S-0016(0.2K), FR-E810W-0008(0.1K), and FR-E810W-0015).)

Terminal Specifications FR-E800-SCE

Type		Terminal Symbol	Terminal Name	Description	
Main Circuit		R/L1, S/L2, T/L3 (*1)	AC Power Input	Connected to the commercial power supply.	
		U, V, W	Inverter Output	Connect a three-phase squirrel-cage motor or PM motor.	
		P/+, PR	Brake Resistor Connection	Connect an optional brake resistor (MRS, MYS, FR-ABR) between terminal P/+ and PR. (A brake resistor cannot be connected to the 0.1K or 0.2K)	
		P/+, N/-	Brake Unit Connection	Connect the brake unit (FR-BU2, FR-BU, or BU) or the multifunction regeneration converter (FR-XC in power regeneration mode) to these terminals.	
		P/+, P1	DC Reactor Connection	Remove the jumper across terminals P/+ and P1, and connect a DC reactor. When a DC reactor is not connected, the jumper across terminals P/+ and P1 should not be removed.	
		⏚	Earth (Ground)	For earthing (grounding) the inverter chassis. Be sure to earth (ground) the inverter.	
Input Signal	Frequency Setting	10	Frequency Setting Power Supply	For earthing (grounding) the inverter chassis. Be sure to earth (ground) the inverter.	5 ±0.5 VDC, Permissible load current: 10 mA
		2	Frequency Setting (Voltage)	Inputting 0 to 5 VDC (or 0 to 10 VDC) provides the maximum output frequency at 5 V (or 10 V) and makes input and output proportional. Use Pr.73 to switch between input 0 to 5 VDC (initial setting), 0 to 10 VDC, and 0 to 20 mA. * The initial setting varies depending on the specification. Set the voltage/current input switch to the "I" position to select current input (0 to 20 mA).	For voltage input, Input resistance: 10 ±1 kΩ Maximum permissible voltage: 20 VDC For current input, Input resistance: 245 ±5 Ω Permissible maximum current: 30 mA
		4	Frequency Setting (Current)	Inputting 4 to 20 mADC (or 0 to 5 VDC, 0 to 10 VDC) provides the maximum output frequency at 20 mA and makes input and output proportional. This input signal is valid only when the AU signal is ON (terminal 2 input is invalid). To use terminal 4 (current input at initial setting), assign "4" to Pr.178 or Pr.189 (Input terminal function selection) before turning ON the AU signal. * The initial setting varies depending on the specification. Use Pr.267 to switch between input 4 to 20 mA (initial setting), 0 to 5 VDC, and 0 to 10 VDC. Set the voltage/current input switch in the "V" position to select voltage input (0 to 5 V / 0 to 10 V).	
Output Signal	Relay	A, B, C	Relay Output (Fault Output)	1 changeover contact output indicates that the inverter protective function has activated and the outputs are stopped. Fault: discontinuity across B and C (continuity across A and C), Normal: continuity across B and C (discontinuity across A and C)	Contact capacity: 240 VAC 2A (power factor = 0.4) or 30 VDC 1 A
Safety Stop Signal		SX1	Safety input (Channel 1)	Terminal functions can be selected using Pr.S051 SX1/SX2 terminal function selection. For details, refer to the FR-E800-SCE Instruction Manual (Functional Safety).	
		SX2	Safety input (Channel 2)		
		SY1	Safety Output (Channel 1)	Terminal functions can be selected using Pr.S055 SY1/SY2 terminal function selection. For details, refer to the FR-E800-SCE Instruction Manual (Functional Safety).	
		SY2	Safety Output (Channel 2)		
Common Terminal		SD	24 VDC Power Supply Common	Common output terminal for 24 VDC 0.1A power supply (terminal PC). Isolated from terminal 5.	
			External Transistor Common (Source (Positive Common))		
		PC	Safety Input Terminal Common	Common terminal for terminals SX1 and SX2.	Power supply voltage range: 22 to 26.5 VDC Permissible load current: 100 mA
			24 VDC Power Supply	Can be used as a 24 VDC 0.1 A power supply.	
		5	Frequency Setting Common	Common terminal for the frequency setting signal (terminal 2 or 4). Do not earth (ground).	
		SC1	Safety Output Common (Channel 1)	For details, refer to the FR-E800-SCE Instruction Manual (Functional Safety).	
		SC2	Safety Output Common (Channel 2)		
Communication		–	Ethernet Connector (2-Port) (*2)	Communication can be made via Ethernet. Category: 100BASE-TX/10BASE-T Transmission method: Baseband Data transmission speed: 100 Mbps (100BASE-TX) / 10 Mbps (10BASE-T) Maximum segment length: 100 m between the hub and the inverter Interface: RJ-45 Number of cascade connection stages: Up to 2 (100BASE-TX) / up to 4 (10BASE-T) Number of interfaces available: 2 IP version: IPv4	
		–	USB Connector (*3)	By connecting an inverter to the personal computer through USB, FR Configurator2 can be used for setting the inverter and monitoring the operation. Interface: conforms to USB 1.1 Transmission speed: 12 Mbps Connector: USB mini B connector (receptacle mini B type)	

Notes:
1. Terminal T/L3 is not available for the single-phase power input models.
2. Do not connect the parameter unit. The inverter may be damaged.
3. USB bus power connection is available. The maximum SCCR should be 500 mA.

Outline Dimension Drawings

FR-E820-0.1K to 0.75K
FR-E820S-0.1K to 0.4K
FR-E810W-0.1K to 0.4K

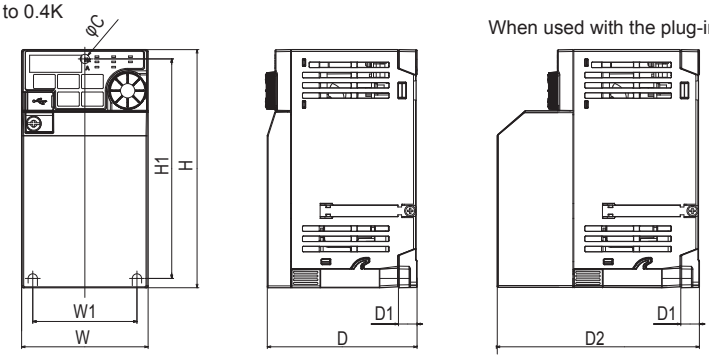

FR-E820-1.5K to 22K
FR-E840-0.4K to 22K
FR-E860-0.75K to 7.5K
FR-E820S-0.75K to 2.2K
FR-E810W-0.75K

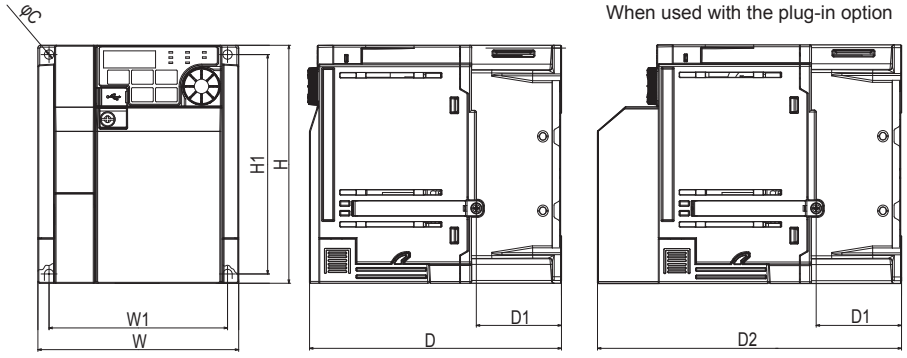

Three-Phase 200V Class

Inverter Model	W	W1	H	H1	D	D1	D2	C
FR-E820-0.1K	68	56	128	118	80.5	10	108.1	5
FR-E820-0.2K								
FR-E820-0.4K					112.5	42	140.1	
FR-E820-0.75K					132.5		160.1	
FR-E820-1.5K	108	96			135.5	46	163.1	
FR-E820-2.2K								
FR-E820-3.7K	140	128			142.5	52.5	170.1	
FR-E820-5.5K	180	164	260	244	165	71.5	192.6	6
FR-E820-7.5K								
FR-E820-11K	220	195			190	84.7	217.6	
FR-E820-15K								
FR-E820-18.5K		200	350	330				10
FR-E820-22K								

Three-Phase 400V Class

Inverter Model	W	W1	H	H1	D	D1	D2	C
FR-E840-0.4K	108	96	128	118	129.5	40	157.1	5
FR-E840-0.75K								
FR-E840-1.5K					135	46	162.6	
FR-E840-2.2K	140	128	150	138		43.5		
FR-E840-3.7K								
FR-E840-5.5K	220	208	150	138	147	68	174.6	
FR-E840-7.5K								
FR-E840-11K		195	260	244	190	84.7	217.6	6
FR-E840-15K								
FR-E840-18.5K		200	350	330				10
FR-E840-22K								

Three-Phase 600V Class

Inverter Model	W	W1	H	H1	D	D1	D2	C
FR-E860-0.75K	140	128	150	138	135	43.5	162.6	5
FR-E860-1.5K								
FR-E860-2.2K								
FR-E860-3.7K	220	208			147	68	174.6	
FR-E860-5.5K								
FR-E860-7.5K								

Single-Phase 200V Class

Inverter Model	W	W1	H	H1	D	D1	D2	C
FR-E820S-0.1K	68	56	128	118	80.5	10	108.1	5
FR-E820S-0.2K								
FR-E820S-0.4K					142.5	42	170.1	
FR-E820S-0.75K	108	96			135	45.5	162.6	
FR-E820S-1.5K					161	46	188.6	
FR-E820S-2.2K	140	128			142.5	52.5	170.1	

Single-Phase 100V Class

Inverter Model	W	W1	H	H1	D	D1	D2	C
FR-E810W-0.1K	68	56	128	118	80.5	10	108.1	5
FR-E810W-0.2K					110.5		138.1	
FR-E810W-0.4K					142.5	42	170.1	
FR-E810W-0.75K	108	96			135	45.5	162.6	

DBR Pairings

Inverter Series [-5, -E, -SCE]	Resistor Model Number 10% Duty *(Parts in bold consist of a resistor pair that will need to be wired in parallel)*	Resistor Model Number 25% Duty *(Parts in bold consist of a resistor pair that will need to be wired in parallel)*	Resistor Model Number 33% Duty *(Parts in bold consist of a resistor pair that will need to be wired in parallel)*	Resistor Model Number 50% Duty *(Parts in bold consist of a resistor pair that will need to be wired in parallel)*
E810W-0030	RFP-V-200-0030-10	RFP-V-200-0030-25	RFP-V-200-0030-33	RFP-V-200-0030-50
E810W-0050	RFP-V-200-0050-10	RFP-V-200-0050-25	RFP-V-300-0050-33	RFP-V-400-0050-50
E820-0030	RFP-V-200-0030-10	RFP-V-200-0030-25	RFP-V-200-0030-33	RFP-V-200-0030-50
E820-0050	RFP-V-200-0050-10	RFP-V-200-0050-25	RFP-V-300-0050-33	RFP-V-400-0050-50
E820-0080	RFP-V-200-0080-10	RFP-V-200-0080-25	RFP-V-500-0080-33	**RFP-V-400-0080-50**
E820-0110	RFP-V-300-0110-10	**RFP-V-300-0110-25**	**RFP-V-400-0110-33**	CU-DB66D0-0110-50
E820-0175	RFP-V-400-0170-10	**RFP-V-500-0170-25**	CU-DB44D0-0170-33	CU-DB44D0-0170-50
E820-0240	**RFP-V-300-0020-10**	CU-DB28D0-0240-25	CU-DB28D0-0240-33	CU-DB28D0-0240-50
E820-0330	**RFP-V-400-0330-10**	CU-DB22D0-0330-25	CU-DB22D0-0330-33	CU-DB22D0-0330-50
E820-0470	CU-DB15D0-0470-10	CU-DB15D0-0470-25	CU-DB15D0-0470-33	CU-DB15D0-0470-50
E820-0600	CU-DB10D0-0600-10	CU-DB10D0-0600-25	CU-DB10D0-0600-33	CU-DB10D0-0600-50
E820-0760	CU-DB8D00-0760-10	CU-DB8D00-0760-25	CU-DB8D00-0760-33	CU-DB8D00-0760-50
E820-0900	CU-DB8D00-0900-10	CU-DB8D00-0900-25	CU-DB8D00-0900-33	CU-DB8D00-0900-50
E840-0016	RFP-V-400-0016-10	RFP-V-400-0016-25	RFP-V-400-0016-33	RFP-V-400-0016-50
E840-0026	RFP-V-300-0026-10	RFP-V-300-0026-25	RFP-V-300-0026-33	RFP-V-400-0026-50
E840-0040	RFP-V-300-0040-10	RFP-V-400-0040-25	RFP-V-500-0040-33	**RFP-V-400-0040-50**
E840-0060	RFP-V-300-0060-10	**RFP-V-400-0060-25**	**RFP-V-400-0060-33**	CU-DB0198-0060-50
E840-0095	RFP-V-400-0095-10	**RFP-V-500-0095-25**	CU-DB0143-0095-33	CU-DB0143-0095-50
E840-0120	**RFP-V-300-0120-10**	CU-DB0103-0120-25	CU-DB0103-0120-33	CU-DB0103-0120-50
E840-0170	**RFP-V-400-0170-10**	CU-DB74D0-0170-25	CU-DB74D0-0170-33	CU-DB74D0-0170-50
E840-0230	CU-DB54D0-0230-10	CU-DB54D0-0230-25	CU-DB54D0-0230-33	CU-DB54D0-0230-50
E840-0300	CU-DB40D0-0300-10	CU-DB40D0-0300-25	CU-DB40D0-0300-33	CU-DB40D0-0300-50
E840-0380	CU-DB29D0-0380-10	CU-DB29D0-0380-25	CU-DB29D0-0380-33	CU-DB29D0-0380-50
E840-0440	CU-DB29D0-0440-10	CU-DB29D0-0440-25	CU-DB29D0-0440-33	CU-DB29D0-0440-50
E820S-0030	RFP-V-200-S0030-10	RFP-V-200-S0030-25	RFP-V-200-S0030-33	RFP-V-200-S0030-50
E820S-0050	RFP-V-200-S0050-10	RFP-V-200-S0050-25	RFP-V-300-S0050-33	RFP-V-400-S0050-50
E820S-0080	RFP-V-200-S0080-10	RFP-V-400-S0080-25	RFP-V-500-S0080-33	**RFP-V-400-S0080-50**
E820S-0110	RFP-V-300-S0110-10	**RFP-V-300-S0110-25**	**RFP-V-400-S0110-33**	CU-DB66D0-0110-50
FR-E860-0017	RFP-V-300-385	RFP-V-300-385	RFP-V-300-385	RFP-V-400-385
FR-E860-0027	RFP-V-300-330	RFP-V-400-330	RFP-V-500-330	**RFP-V-500-660**
FR-E860-0040	RFP-V-300-286	**RFP-V-500-572**	**RFP-V-500-572**	CU-DB0286-0040-50
FR-E860-0061	RFP-V-400-209	**RFP-V-500-418**	CU-DB0209-0061-30	CU-DB0209-0061-50
FR-E860-0090	**RFP-V-300-308**	CU-DB0154-0090-25	CU-DB0154-009030	CU-DB0154-0090-50
FR-E860-0120	**RFP-V-400-220**	CU-DB0110-0120-25	CU-DB0110-0120-30	CU-DB0110-0120-50

Options

Name		Type	Applications	Applicable Inverter			Remarks
				E800	E800-E	E800-SCE	
Plug-In Type	Vector Control Orientation Control Encoder Feedback Control	FR-A8AP E Kit	Vector control can be performed for encoder-equipped motors (induction motors). The main spindle can be stopped at a specified position (orientation) in combination with an encoder. The motor speed is sent back and the speed is maintained constant.	●	●	●	Shared among all models
	16-bit Digital Input	FR-A8AX E Kit	This input interface sets the high frequency accuracy of the inverter using an external BCD or binary digital signal. · BCD code 3 digits (maximum 999) · BCD code 4 digits (maximum 9999) · Binary 12 bits (maximum FFFH) · Binary 16 bits (maximum FFFFH)	●	●	●	
	Digital Output Extension Analog Output	FR-A8AY E Kit	This option provides the inverter with open collector outputs selected from among the standard output signals. This option adds 2 different signals that can be monitored such as the output frequency and output voltage. 20mADC or 10VDC meter can be connected.	●	●	●	
	Relay Output	FR-A8AR E Kit	Output any three output signals available with the inverter as standard from the relay contact terminals.	●	●	●	
	CC-Link Communication	FR-A8NC E Kit	This option allows the inverter to be operated or monitored or the parameter setting to be changed from a computer or programmable controller.	●	●	●	
	DeviceNet Communication	FR-A8ND E Kit		●	●	●	
	PROFIBUS-DP Communication	R-A8NP E Kit		●	●	●	
	Control Terminal Option	FR-E8TR	RS-485 2 Port Terminal Block	●	–	–	
	Control Terminal Option	FR-E8TE7	Screw Type Terminal Block	●	–	–	
Stand-Alone Type	Liquid Crystal Display Operation Panel	FR-LU08 (-01)	Graphical operation panel with liquid crystal display	●	–	–	Shared among all models
	Parameter Unit	FR-PU07	Interactive parameter unit with LCD display	●	–	–	
	Parameter Unit with Battery Pack	FR-PU07BB (-L)	This parameter unit enables parameter setting without connecting the inverter to power supply.	●	–	–	
	Enclosure Surface Operation Panel	FR-PA07	This operation panel enables inverter operation and monitoring of frequency, etc. from the enclosure surface	●	–	–	
	Parameter Unit Connection Cable	FR-CB20_	Cable for connection of operation panel or parameter unit _ indicates a cable length. (1m, 3m, 5m)	●	–	–	
	Encoder Cable Mitsubishi Electric Vector Control Dedicated Motor (SFV5RU)	FR-V7CBL_	Connection cable for the inverter and encoder for Mitsubishi Electric vector control dedicated motor (SFV5RU). _ indicates a cable length. (5m, 15m, 30m)	●	●	●	
	USB Cable	MR-J3USBCBL3M Cable Length: 3 m	Amplifier connector: Mini B connector (5-pin) Personal computer connector: A connector 	●	●	●	
	Intercompatibility Attachment	FR-E7AT 01/02/03	For installation of a FR-E800 series inverter to the installation holes of FR-A024/A044 series inverter.	●	●	●	3.7K or lower. The option's model varies with the inverter's model.
	Intercompatibility Attachment	FR-E8AT03	For installation of a FR-E700/E800 inverter to the installation holes of FR-A024/A044/E700 inverter.	●	●	●	3.7K
	DIN Rail Attachment	FR-UDA 01 to 03	Attachment for installation on DIN rail	●	●	●	3.7K or lower. The option's model varies with the inverter's model.
	Panel Through Attachment	FR-E8CN 01 to 06	Using this attachment dissipates the inverter's heat by having the inverter heatsink protrude from the back side of the enclosure.	●	●	●	All capacities. The option's model varies with the inverter's model.
	Totally Enclosed Structure Specification Attachment (IP40)	FR-E8CV 01 to 04	Installing the attachment to the inverter changes the protective structure of the inverter to the totally enclosed structure (IP40 equivalent as specified by JEM1030).	○	○	○	
	AC Reactor	FR-HAL	For harmonic current reduction and inverter input power factor improvement	▲	▲	▲	
	DC Reactor	FR-HEL		▲	▲	▲	
	EMC Directive Compliant Noise Filter	SF, FR-E5NF, FR-S5NFSA	C Directive (EN 61800-3 C3) compliant noise filter	▲	▲	▲	
	EMC Compliant EMC Filter Installation Attachment	FR-A5AT03 FR-AAT02 FR-E5T(-02)	For installation of the inverter to the EMC Directive compliant EMC filter (SF).	▲	▲	▲	

●: Supported ○: To be supported soon ▲: Supported (UL/cUL not yet met) –: Not Supported

Options (CONTINUED)

	Name	Type	Applications	Applicable Inverter			Remarks
				E800	E800-E	E800-SCE	
Stand-Alone Type	Radio Noise Filter	FR-BIF(H)	For radio noise reduction (connect to the input side)	●	●	○	All capacities.
	Line Noise Filter	FR-BSF01 FR-BLF	For line noise reduction	●	●	○	
	Filterpack	FR-BFP2	Combination of power factor improving DC reactor, common mode choke, and capacitative filter	●	●	●	0.4K to 15K of the three-phase power input model. The option's model varies with the inverter's model.
	Brake Resistor	MRS Type, MYS Type	For increasing the regenerative braking capability (permissible duty 3%ED)	●	●	●	0.4K or higher. The option's model varies with the inverter's model.
	High-Duty Brake Resistor	FR-ABR	For increasing the regenerative braking capability (permissible duty 10%/6%ED)	▲	▲	▲	
	Brake unit, Resistor Unit, Discharging Resistor	FR-BU2, FR-BR, GZG, GRZG Type	For increasing the braking capability of the inverter (for high-inertia load or negative load) Brake unit, electrical-discharge resistor and resistor unit are used in combination	●	●	●	
	Multifunction Regeneration Converter Dedicated Stand-Alone Reactor Dedicated Box-Type Reactor	FR-XC FR-XCL/FR-XCG FR-XCB	One inverter can handle harmonic suppression and power regeneration. Functions that match the application can be selected by combining the inverter/converter with the dedicated reactor FR-XCB (box-type) or FR-XCL/FR-XCG.	●	●	●	According to capacities
	High Power Factor Converter	FR-HC2	The high power factor converter switches the converter section on/off to reshape an input current waveform into a sine wave, greatly suppressing harmonics. (Used in combination with the standard accessory.)	●	●	–	
	Surge Voltage Suppression Filter	FR-ASF FR-BMF	Filter for suppressing surge voltage on motor	●	●	●	
Others	Pilot Generator	QVAH-10	For tracking operation. 70 V / 35 VAC 500 Hz (at 2500 r/min)	●	●	●	Shared among all models.
	Deviation Sensor	YVGC-500WNS	For continuous speed control operation (mechanical deviation detection) Output 90VAC /90°	●	●	●	
	Analog Frequency Meter (64mm x 60mm)	YM-206NRI 1mA	Dedicated frequency meter (graduated to 130 Hz). Moving-coil type DC ammeter	●	–	–	
	Calibration Resistor	RV24YN 10kΩ	For frequency meter calibration. Carbon film type B characteristic	●	●	●	
	FR Configurator2 (Inverter setup software)	SW1DND-FRC2	Supports an inverter startup to maintenance.	●	●	●	
	Configurator Mobile (Mobile App for Inverters)	–	The app enables operation of inverters using smart phones or tablets.	–	●	●	

●: Supported ○: To be supported soon ▲: Supported (UL/cUL not yet met) –: Not Supported

Plug-In Options

Model Number	Description
FR-A8AX-60 E-KIT	16-BIT digital input option card kit
FR-A8NC-60 E-KIT	CC-LINK communication option card kit
FR-A8ND-60 E-KIT	DeviceNet communication option card kit
FR-A8AY-60 E-KIT	Digital/Analog output option card kit
FR-A8AP-60 E-KIT	Encoder/Vector control option card kit
FR-A8NP-60 E-KIT	Profibus communication option card kit
FR-A8AR-60 E-KIT	Relay Output option card kit

Plug-In Options

Model Number	E820	E840	E860	E820S
FR-E8CN01	E820-0080/0110	-	-	E820S-0080
FR-E8CN02	E820-0175	-	-	E820S-0110
FR-E8CN03	E820-0240/0330	-	-	-
FR-E8CN04	-	E840-0040	-	-
FR-E8CN05	-	E840-0060/0095	E860-0027/0040	-
FR-E8CN06	-	E840-0120/0170	E860-0061/0090	-

FR-F800-E Series

The FR-F800-E is a pump and fan control VFD that combines performance, accuracy and reliability with embedded Ethernet based communications to enhance overall system flexibility. With 100Mbps Ethernet TCP/IP and BACnet/IP connectivity as the standard, the FR-F800-E provides an increased ability for remote system monitoring, parameter adjustments and easy integration into an existing network environments.

- **NEMA 1 / UL-1 Rated:** FR-F800 is Plenum-Rated and can be mounted as a stand-alone unit when required – no need to provide a separate enclosure*
- **Ethernet Communications as Standard:** Communicate with MODBUS TCP/IP or CC-Link IE Field Basic communications networks at a speed of 100Mbps without the need for an extra option card.
- **Built-in Filter:** Limits the effects of radio noise on sensitive equipment
- **Drive to Drive Communications:** Utilize the internal PLC to communicate without a master PLC controller allowing the drives to work together as a team
- **Optimum Excitation Control:** FR-F800 uses vector drive technology to calculate motor load and ensures maximum energy savings, even if motor loading changes
- **3 Programmable Skip Frequencies:** Avoid points of mechanical resonance in ducting and pipework
- **Drive Settings can be Uploaded or Downloaded:** Using a standard USB memory stick
- **Real-time Clock:** Drive trip messages are 'time stamped' for diagnostic purposes**
- **Bi-Directional Coasting Motor Restart:** FR-F800 can safely 'catch' and control a motor which is already spinning (in either direction) on start-up.
- **Advanced PID Control Features:**
  - 2 Independent PID loops
  - Pre-Charge Mode
  - Sleep Mode
  - Multiple Motor control (up to 4)
  - Selectable response to 'loss of signal'
- Control of high efficiency IPM motors
- **Advanced Power Monitoring Capability:** Including pulse train output
- **UL-Approved Rating:** For single phase operation
- **Out-of-Range Warning System:** Detects broken drive belts and other potential mechanical problems
- **Automatic IP Address Detection:** Automatically detect the IP address of all connected drives, quickly enabling connection and programming using FR-Configurator software
- **Remote Operation:** Communicate with a drive remotely for commissioning, monitoring or troubleshooting anytime from anywhere



Notes
* Drive Sizes up to 40HP
** Requires the use of the FR-LU08 keypad

FR-F8 ❶ 0- ❷ ❸ ❹

❶ Voltage

Symbol	Voltage Class
2	200V class
4	400V class
6	600V class

❷ Capacity

Symbol	Voltage Class
1100023 to 068301	Inverter SLD rated current (A)
0.75 to 315K	Inverter LD rated capacity (kW)

❸ Communication

Symbol	Type (*1)	Communication Type
E1	FM	Ethernet (*2)
E2	CA	

❹ Circuit Board

Symbol	Circuit Board Coating (conforming to IEC60721-3-3 3C2/3S2)	Plated Conductor
None	Without	Without
60	With	Without
06 (*3)	With	With

1. Specification differs by the type. Major differences are shown in the table below.
2. Inverter equipped with a built-in Ethernet board (FR-A8ETH).
3. Applicable for the FR-F820-00340(7.5K) or higher, and the FR-F840-00170(7.5K) or higher.

Type	Monitor output	Initial Setting				
		Built-in EMC Filter	Control Logic	Rated Frequency	Pr.19 Base Frequency Voltage	Pr.570 Multiple Rating Setting
FM (terminal FM equipped model)	Terminal FM: pulse train output Terminal AM: analog voltage output (0 to 10 VDC)	OFF	Sink logic	60 Hz	9999 (same as the power supply voltage)	1 (LD rating)
CA (terminal CA equipped model)	Terminal CA: analog current output (0 to 20 mADC) Terminal AM: analog voltage output (0 to 10 VDC)	ON	Source logic	50 Hz	8888 (95% of the power supply voltage)	0 (SLD rating)

FR-F800 Ratings, 240V Class

Model Number	AMPS for Duty		HP For Duty (NEC)		Frame Size	Weight (lbs)	Cooling Method	Protective Rating	Stocked Item
	SLD	LD	SLD	LD					
FR-F820-00046-E3N6	4.6	4.2	1	1	A	6	Self-Cooling	UL Type 1- Plenum Rated	S
FR-F820-00077-E3N6	7.7	7	2	2	B	6			S
FR-F820-00105-E3N6	10.5	9.6	3	3	C	9	Forced Air Cooling		S
FR-F820-00167-E3N6	16.7	15.2	5	5	C	9			S
FR-F820-00250-E3N6	25	23	7.5	7.5	C	9			S
FR-F820-00340-E3N6	34	31	10	10	D	17			S
FR-F820-00490-E3N6	49	45	20	15	D	17			S
FR-F820-00630-E3N6	63	58	20	20	E	20			S
FR-F820-00770-E3N6	77	70.5	25	25	F	37			S
FR-F820-00930-E3N6	93	85	30	30	F	37			S
FR-F820-01250-E3N6	125	114	40	40	F	37			S
FR-F820-01540-E360	154	140	60	50	G	48		IP00	S
FR-F820-01870-E360	187	170	60	60	H	92			S
FR-F820-02330-E360	233	212	75	75	H	92			S
FR-F820-03160-E360	316	288	125	100	K	119			S
FR-F820-03800-E3U6	380	346	150	125	L	163			S
FR-F820-04750-E3U6	475	432	150	150	L	163			-

Note: Drives in Shaded Area MUST be used together with FR-HEL DC Link Choke (sold separately).
SLD - 110% 60s, 120% 3s (inverse-time characteristics) at ambient temperature of 40°C.
LD - 120% 60s, 150% 3s (inverse-time characteristics) at ambient temperature of 50°C.

FR-HEL DC Link Chokes (sold separately)

Model Number	LD	SLD
FR-F820-03160-E360	FR-HEL-75K	FR-HEL-90K
FR-F820-03800-E3U6	FR-HEL-90K	FR-HEL-110K
FR-F820-04750-E3U6	FR-HEL-110K	FR-HEL-110K

FR-F800-E Ratings, 480V Class

Model Number	AMPS for Duty		HP For Duty (NEC)		Frame Size	Weight (lbs) (*1)	Cooling Method	Protective Rating	Stocked Item
	SLD	LD	SLD	LD					
FR-F840-00023-E3N6	2.3	2.1	1	1	C	8	Self - Cooling	UL Type 1 – Plenum Rated	S
FR-F840-00038-E3N6	3.8	3	2	2	C	8			S
FR-F840-00052-E3N6	5.2	4.8	3	3	C	8			S
FR-F840-00083-E3N6	8.3	7.6	5	5	C	9			S
FR-F840-00126-E3N6	12.6	11.5	7.5	7.5	C	9			S
FR-F840-00170-E3N6	17	16	10	10	D	17	Forced Air Cooling		S
FR-F840-00250-E3N6	25	23	15	15	D	17			S
FR-F840-00310-E3N6	31	29	20	20	E	20			S
FR-F840-00380-E3N6	38	35	25	25	E	20			S
FR-F840-00470-E3N6	47	43	30	30	F	37			S
FR-F840-00620-E3N6	62	57	40	40	F	37			S
FR-F840-00770-E360	77	70	60	50	G	51		IP00	S
FR-F840-00930-E360	93	85	60	60	H	90			S
FR-F840-01160-E360	116	106	75	75	H	90			S
FR-F840-01800-E360	180	144	150	100	H	95			S
FR-F840-02160-E3U6	216	180	150	150	J	114			S
FR-F840-02600-E3U6	260	216	200	150	J	121			S
FR-F840-03250-E3U6	325	260	250	200	L	156			S
FR-F840-03610-E3U6	361	325	300	250	L	172			S
FR-F840-04320-E3U6	432	361	350	300	M	257			S
FR-F840-04810-E3U6	481	432	400	350	M	257			S
FR-F840-05470-E3U6	547	481	450	400	N	365			S
FR-F840-06100-E3U6	610	547	500	450	N	365			S
FR-F840-06830-E3U6	683	610	550	500	N	365			S

Note 1: Weights of the drive and the CC2 modules are COMBINED. Drives in Shaded Area MUST be used together with FR-HEL-H DC Link Choke (sold separately)

480V FR-HEL-H DC Link Chokes (sold separately)

Model Number	LD	SLD
FR-F840-01800-E360	FR-HEL-H75K	FR-HEL-H90K
FR-F840-02160-E3U6	FR-HEL-H90K	FR-HEL-H110K
FR-F840-02600-E3U6	FR-HEL-H110K	FR-HEL-H132K
FR-F840-03250-E3U6	FR-HEL-H132K	FR-HEL-H160K
FR-F840-03610-E3U6	FR-HEL-H160K	FR-HEL-H185K
FR-F840-04320-E3U6	FR-HEL-H185K	FR-HEL-H220K
FR-F840-04810-E3U6	FR-HEL-H220K	FR-HEL-H250K
FR-F840-05470-E3U6	FR-HEL-H250K	FR-HEL-H280K
FR-F840-06100-E3U6	FR-HEL-H280K	FR-HEL-H315K
FR-F840-06830-E3U6	FR-HEL-H315K	FR-HEL-H355K

Model Number	AMPS for Duty		HP For Duty (NEC)		Frame Size	Weight (lbs) (*1)	Cooling Method	Protective Rating	Stocked Item
	SLD	LD	SLD	LD					
FR-F842-07700-E3U6 + FR-CC2-H355K-60	-	683	-	550	P+R	827	Forced Air Cooling	IP00	S
FR-F842-07700-E3U6 + FR-CC2-H400K-60	770	-	650	-	P+S	979			S
FR-F842-08660-E3U6 + FR-CC2-H400K-60	-	770	-	650	P+S	979			S
FR-F842-08660-E3U6 + FR-CC2-H450K-60	866	-	700	-	P+S	986			S
FR-F842-09620-E3U6 + FR-CC2-H450K-60	-	866	-	700	Q+S	1162			S
FR-F842-09620-E3U6 + FR-CC2-H500K-60	962	-	800	-	Q+S	1168			S
FR-F842-10940-E3U6 + FR-CC2-H500K-60	-	962	-	800	Q+S	1168			S
FR-F842-10940-E3U6 + FR-CC2-H560K-60	1094	-	900	-	Q+S	1168			S
FR-F842-12120-E3U6 + FR-CC2-H560K-60	-	1094	-	900	Q+S	1168			S
FR-F842-12120-E3U6 + FR-CC2-H630K-60	1212	-	1000	-	Q+S	1168			S

Note: Weights of the drive and the CC2 modules are COMBINED. Drives in Shaded Area MUST be used together with FR-HEL-H DC Link Choke (sold separately).
SLD- 110% 60s, 120% 3s (inverse-time characteristics) at ambient temperature of 40°C
LD- 120% 60s, 150% 3s (inverse-time characteristics) at ambient temperature of 50°C
Always install the FR-CC2-H converter unit (not required when the FR-HC2 high power factor converter is used)

FR-F800-E Ratings, 600V Class

Model Number (*3)	AMPS for Duty		Horsepower for Duty (NEC)		Frame Size	Weight (lbs)	Cooling Method	Protective Rating	Stocked Item
	SLD	LD	SLD	LD					
FR-F860-00027-E3N6	2.7	2.5	2	1.5	C	11.7	Self Cooling	Enclosed Type (UL-1 plenum rated)	S
FR-F860-00061-E3N6	6.1	5.6	5	3	C	12.8	Forced Air Cooling		S
FR-F860-00090-E3N6	9	8.2	7.5	5	C	12.8			S
FR-F860-00170-E3N6	17	16	15	10	D	15.4			S
FR-F860-00320-E3N6	32	27	30	25	E	19.8			S
FR-F860-00450-E3N6	45	41	40	40	F	37.4			S
FR-F860-00680-E360	68	62	60	60	H	79.2		Open Type (IP00)	S
FR-F860-01080-E360 (*1)	108	99	100	100	H	90.2			S
FR-F860-01440-E360 (*1)	144	131	150	125	J	114			S
FR-F860-01670-E360 (*1)	167	152	150	150	J	114			S
FR-F860-02430-E360 (*1)	243	221	250	200	J	121			S
FR-F860-02890-E360 (*1)	289	255	300	250	M	246			S
FR-F860-03360-E360 (*1)	336	304	350	300	M	253			S
FR-F860-04420-E360 (*1)	442	402	450	400	N	337			S
FR-F862-05450-E360 + FR-CC2-C355K-60 (*2)	545	496	550	500	P+R	810			S
FR-F862-06470-E360 + FR-CC2-C400K-60 (*2)	647	589	650	600	Q+S	920			S
FR-F862-08500-E360 + FR-CC2-C560K-60 (*2)	850	773	850	750	Q+S	1126			S

Notes:
1. These drives MUST be used with a DC Link Choke (sold separately).
2. FR-F862 Drives are inverter stage only; use together with FR-CC2-C rectifier stage. Maximum Input and Output Current of FR-CC2 modules is the value shown. COMBINED weight shown.
3. The FR-F860 does not include a built-in parameter unit. The FR-DU08 or FR-LU08 is sold separately.

600V FR-HEL-C DC Link Chokes
(sold separately)

Model Number	SLD	LD
FR-F860-01080-E360	FR-HEL-C75K	FR-HEL-C75K
FR-F860-01440-E360	FR-HEL-C90K	FR-HEL-C90K
FR-F860-01670-E360	FR-HEL-C110K	FR-HEL-C110K
FR-F860-02430-E360	FR-HEL-C185K	FR-HEL-C132K
FR-F860-02890-E360	FR-HEL-C220K	FR-HEL-C185K
FR-F860-03360-E360	FR-HEL-C280K	FR-HEL-C220K
FR-F860-04420-E360	FR-HEL-C280K	FR-HEL-C280K

FR-F800-E General Specifications

Operation Specifications	Control Method		Soft-PWM control, high carrier frequency PWM control (selectable among V/F control (Optimum excitation control), Advanced magnetic flux vector control (Advanced optimum excitation control) and PM motor control)
	Output Frequency Range		0.2 to 590 Hz (The upper-limit frequency is 400 Hz under Advanced magnetic flux vector control, and PM motor control)
	Frequency Setting Resolution	Analog Input	0.015 Hz/60 Hz (terminal 2, 4: 0 to 10 V/12 bits) 0.03 Hz/60 Hz (0 to 5 V/11 bits or 0 to 20 mA/approx. 11 bits for terminals 2 and 4, 0 to ±10 V/12 bits for terminal 1) 0.06 Hz/60 Hz (0 to ±5 V/11 bits for terminal 1)
		Digital Input	0.01Hz
	Frequency Accuracy	Analog Input	Within ±0.2% of the max. output frequency (25°C ±10°C)
		Digital Input	Within 0.01% of the set output frequency
	Voltage / Frequency Characteristics		Base frequency can be set from 0 to 590 Hz. Constant-torque/variable-torque pattern or adjustable 5 points V/F can be selected.
	Starting Torque	Induction Motor	120% 0.5 Hz (Advanced magnetic flux vector control)
		IPM Motor	50%
	Torque Boost		Manual torque boost
	Acceleration / Deceleration Time Setting		0 to 3600 s (acceleration and deceleration can be set individually), linear or S-pattern acceleration/deceleration mode, backlash countermeasures acceleration/deceleration can be selected.
	DC Injection Brake (Induction Motor)		Operation frequency (0 to 120 Hz), operation time (0 to 10 s), operation voltage (0 to 30%) variable
	Stall Prevention Operation Level		Activation range of stall prevention operation (SLD rating: 0 to 120%, LD rating: 0 to 150%). Whether to use the stall prevention or not can be selected. (V/F control, Advanced magnetic flux vector control)
	Frequency Setting Signal	Analog Input	Terminals 2 and 4: 0 to 10 V, 0 to 5 V, 4 to 20 mA (0 to 20 mA) are available. Terminal 1: -10 to +10 V, -5 to 5 V are available.
		Digital Input	Input using the setting dial of the operation panel or the parameter unit. Four-digit BCD or 16-bit binary (when used with option FR-A8AX)
	Start Signal		Forward and reverse rotation or start signal automatic self-holding input (3-wire input) can be selected.
	Input Signal		Low-speed operation command, Middle-speed operation command, High-speed operation command, Second function selection, Terminal 4 input selection, Jog operation selection, Output stop, Start self-holding selection, Forward rotation command, Reverse rotation command, Inverter reset The input signal can be changed using Pr.178 to Pr.189 (Input terminal function selection).
	Pulse Train Input		100kpps
	Operational Functions		Maximum and minimum frequency settings, multi-speed operation, acceleration/deceleration pattern, thermal protection, DC injection brake, starting frequency, JOG operation, output stop (MRS), stall prevention, regeneration avoidance, increased magnetic excitation deceleration, DC feeding (*1), frequency jump, rotation display, automatic restart after instantaneous power failure, electronic bypass sequence, remote setting, retry function, carrier frequency selection, fast response current limit, forward/reverse rotation prevention, operation mode selection, slip compensation, speed smoothing control, traverse, auto tuning, applied motor selection, RS-485 communication, Ethernet communication, PID control, PID pre-charge function, cooling fan operation selection, stop selection (deceleration stop/coasting), power-failure deceleration stop function, PLC function, life diagnosis, maintenance timer, current average monitor, multiple rating, test run, 24 V power supply input for control circuit, safety stop function, self power management, BACnet communication, PID gain tuning, cleaning, load characteristics storage, emergency drive (*1)
	Output Signals	Open Collector Output (Five Terminals) Relay Output (Two Terminals)	Inverter running, Up to frequency, Instantaneous power failure/undervoltage (*1), Overload warning, Output frequency detection, Fault. The output signal can be changed using Pr.190 to Pr.196 (Output terminal function selection). Fault codes of the inverter can be output (4 bits) from the open collector.
		Pulse Train Output (FM Type)	50 kpps
Indication	For Meter	Pulse Train Output (FM Type)	Max. 2.4 kHz: one terminal (output frequency) The monitored item can be changed using Pr.54 FM/CA terminal function selection.
		Current Output (CA Type)	Max. 20 mADC: one terminal (output frequency) The monitored item can be changed using Pr.54 FM/CA terminal function selection.
		Voltage Output	Max. 10 VDC: one terminal (output frequency) The monitored item can be changed using Pr.158 AM terminal function selection.
	Operation Panel (FR-DU08)	Operating Status	Output frequency, output current, output voltage, frequency setting value The monitored item can be changed using Pr.52 Operation panel main monitor selection.
		Fault Record	Fault record is displayed when a fault occurs. Past 8 fault records and the conditions immediately before the fault (output voltage/current/frequency/cumulative energization time/year/month/date/time) are saved.
Protective / Warning Function			Overcurrent trip during acceleration, Overcurrent trip during constant speed, Overcurrent trip during deceleration or stop, Regenerative overvoltage trip during acceleration, Regenerative overvoltage trip during constant speed, Regenerative overvoltage trip during deceleration or stop, Inverter overload trip (electronic thermal relay function), Motor overload trip (electronic thermal relay function), Heatsink overheat, Instantaneous power failure (*1) Undervoltage (*1), Input phase loss (*1, *2), Stall prevention stop, Loss of synchronism detection (*2), Upper limit fault detection, Lower limit fault detection, Brake transistor alarm detection(*1), Output side earth (ground) fault overcurrent, Output short circuit, Output phase loss, External thermal relay operation (*2), PTC thermistor operation (*2), Option fault, Communication option fault, Parameter storage device fault, PU disconnection, Retry count excess (*2), CPU fault, Operation panel power supply short circuit, 24 VDC power fault, Abnormal output current detection (*2), Inrush current limit circuit fault (*1) Ethernet communication fault (*2), Analog input fault, USB communication fault, Safety circuit fault, Overspeed occurrence (*2), 4 mA input fault (*2), Pre-charge fault (*2), PID signal fault (*2), Internal circuit fault, User definition error in the PLC function. Fan alarm, Stall prevention (overcurrent), Stall prevention (overvoltage), Regenerative brake pre-alarm (*1, *2), Electronic thermal relay function pre-alarm, PU stop, Parameter copy, Safety stop, Maintenance timer 1 to 3 (*2), USB host error, Operation panel lock (*2), Password locked (*2), Parameter write error, Copy operation error, 24 V external power supply operation, Load fault warning, Emergency drive in operation (*1), Continuous operation during communication fault, Ethernet communication fault
Environment	Ambient Temperature		-10°C to +50°C (non-freezing) (LD rating) -10°C to +40°C (non-freezing) (SLD rating)
	Ambient Humidity		With circuit board coating (conforming to IEC60721-3-3 3C2/3S2): 95% RH or less (non-condensing) Without circuit board coating: 90% RH or less (non-condensing)
	Storage Temperature (*3)		-20°C to +65°C
	Atmosphere		Indoors (without corrosive gas, flammable gas, oil mist, dust and dirt, etc.)
	Altitude / Vibration		Maximum 1000 m above sea level (*4), 5.9 m/s² or less (*5) at 10 to 55 Hz (directions of X, Y, Z axes)

Notes:
1. Available only for the standard model.
2. This protective function is not available in the initial status.
3. Temperature applicable for a short time, e.g. in transit.
4. For the installation at an altitude above 1,000 m (up to 2,500 m), derate the rated current 3% per 500 m.
5. 2.9 m/s² or less for the FR-F840-04320(185K) or higher.

FR-F800 Series Terminal Connection Diagram (Version with 0-20mA Analog Output Signal)
CA Type

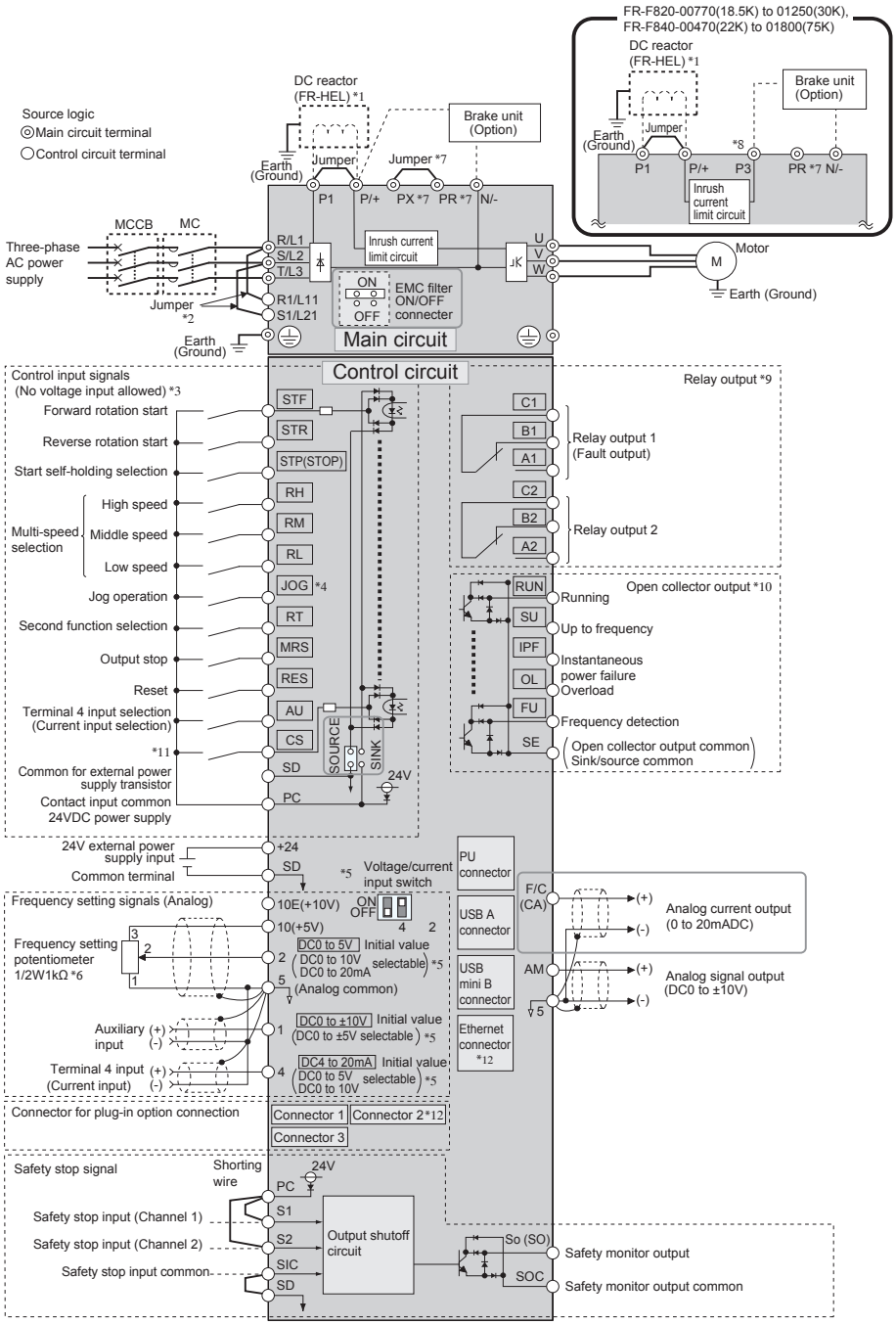

Notes:

1. For the FR-F820-03160(75K) or higher, the FR-F840-01800(75K) or higher, always connect a DC reactor (FR-HEL), which is available as an option. (To select a DC reactor, refer to the User Guide, and select one according to the applicable motor capacity.) When a DC reactor is connected to the FR-F820-02330(55K) or lower or the FR-F840-01160(55K) or lower, if a jumper is installed across terminals P1 and P/+, remove the jumper before installing the DC reactor.
2. When using a separate power supply for the control circuit, remove the jumper between R1/L11 and S1/L21.
3. The function of these terminals can be changed with the input terminal assignment (Pr.178 to Pr.189).
4. Terminal JOG is also used as the pulse train input terminal. Use Pr.291 to choose JOG or pulse.
5. Terminal input specifications can be changed by analog input specification switchover (Pr.73, Pr.267). To input a voltage, set the voltage/current input switch OFF. To input a current, set the voltage/current input switch ON. Terminals 10 and 2 are also used as a PTC input terminal. (Pr.561) (Refer to the FR-F800 Instruction Manual (Detailed).)
6. It is recommended to use 2 W 1 kΩ when the frequency setting signal is changed frequently.
7. Do not use terminals PR and PX. The jumper may or may not be attached depending on the inverter.
8. Do not connect the DC power supply (under DC feeding mode) to terminal P3.
9. The function of these terminals can be changed with the output terminal assignment (Pr.195, Pr.196).
10. The function of these terminals can be changed with the output terminal assignment (Pr.190 to Pr.194).
11. No function is assigned in the initial status. Assign the function using Pr.186 CS terminal function selection.
12. The option connector 2 cannot be used because the Ethernet board is installed in the initial status. The Ethernet board must be removed to install a plug-in option to the option connector 2. (However, Ethernet communication is disabled in that case.)

ADDITIONAL NOTES:

- To prevent a malfunction due to noise, keep the signal cables 10 cm or more away from the power cables. Also, separate the main circuit cables at the input side from the main circuit cables at the output side.
- After wiring, wire offcuts must not be left in the inverter. Wire offcuts can cause an alarm, failure or malfunction. Always keep the inverter clean. When drilling mounting holes in an enclosure etc., take caution not to allow chips and other foreign matter to enter the inverter.
- Set the voltage/current input switch correctly. Incorrect setting may cause a fault, failure or malfunction.

FR-F802 Series Terminal Connection Diagram (Version with 0-20mA Analog Output Signal)

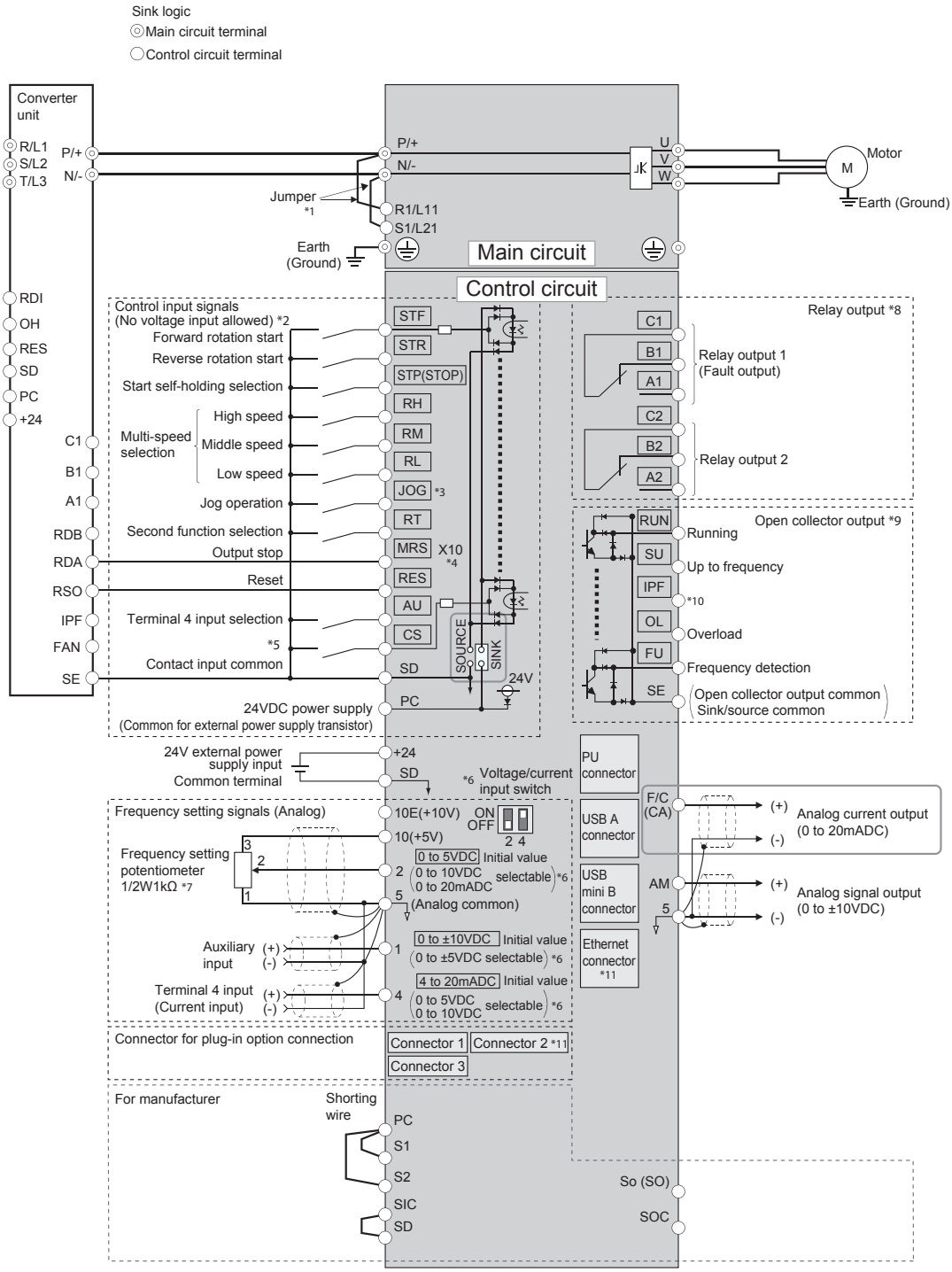

Notes:

1. Terminals R1/L11 and S1/L21 are connected to terminals P/+ and N/- with a jumper respectively. When using a separate power supply for the control circuit, remove the jumpers from R1/L11 and S1/L21.
2. The function of these terminals can be changed with the input terminal assignment (Pr.178 to Pr.189).
3. Terminal JOG is also used as the pulse train input terminal. Use Pr.291 to choose JOG or pulse.
4. The X10 signal (NC contact input specification) is assigned to the terminal MRS in the initial setting. Set Pr.599 = "0" to change the input specification of the X10 signal to NO contact.
5. No function is assigned in the initial setting. Use Pr.186 for function assignment.
6. Terminal input specifications can be changed by analog input specification switchover (Pr.73, Pr.267). To input a voltage (0 to 5 V/0 to 10 V), set the voltage/current input switch OFF. To input a current (4 to 20 mA), set the voltage/current input switch ON. Terminals 10 and 2 are also used as a PTC input terminal. (Pr.561)
7. It is recommended to use 2 W 1 kΩ when the frequency setting signal is changed frequently.
8. The function of these terminals can be changed with the output terminal assignment (Pr.195, Pr.196).
9. The function of these terminals can be changed with the output terminal assignment (Pr.190 to Pr.194).
10. No function is assigned in the initial setting. Use Pr.192 for function assignment.
11. The option connector 2 cannot be used because the Ethernet board is installed in the initial status. The Ethernet board must be removed to install a plug-in option to the option connector 2. (However, Ethernet communication is disabled in that case.)

ADDITIONAL NOTES

- To prevent a malfunction due to noise, keep the signal cables 10 cm or more away from the power cables. Also, separate the main circuit cables at the input side from the main circuit cables at the output side.
- After wiring, wire offcuts must not be left in the inverter. Wire offcuts can cause an alarm, failure or malfunction. Always keep the inverter clean. When drilling mounting holes in an enclosure etc., take caution not to allow chips and other foreign matter to enter the inverter.
- Set the voltage/current input switch correctly. Incorrect setting may cause a fault, failure or malfunction.
- Terminals S1, S2, SIC, So (SO), and SOC are for manufacturer setting. Do not remove the shorting wires across terminals S1 and PC, terminals S2 and PC, and terminals SIC and SD. When the shorting wires are removed, the inverter does not operate.

FR-F800-E Dimensions – Frame Size Key Dimensions, 230V and 480V Drives

Series		Height in (mm)	Width in (mm)	Depth in (mm)
FR-F800	A	12.2 (310)	4.33 (110)	4.39 (112)
	B	12.2 (310)	4.33 (110)	4.98 (127)
	C	12.52 (318)	5.91 (150)	5.57 (141.6)
	D	12.76 (324)	8.66 (220)	6.69 (170)
	E	14.29 (363)	8.66 (220)	7.48 (190)
	F	20.37 (517)	9.84 (250)	7.48 (190)
	G	21.67 (550)	12.80 (325)	7.68 (195)
	H	21.67 (550)	17.13 (435)	9.84 (250)
	J	24.41 (620)	18.31 (465)	11.81 (300)
	K	27.56 (700)	18.31 (465)	9.84 (250)
	L	29.13 (740)	18.31 (465)	14.17 (360)
	M	39.76 (1010)	19.61 (498)	14.96 (380)
	N	39.76 (1010)	26.77 (680)	14.96 (380)

Series		Height in (mm)	Width in (mm)	Depth in (mm)
FR-F842	P	52.4 (1330)	21.3 (540)	17.3 (440)
	Q	62.2 (1580)	26.8 (680)	17.3 (440)
FR-CC2-H	R	52.4 (1330)	23.6 (600)	17.3 (440)
	S	62.2 (1580)	23.6 (600)	17.3 (440)

FR-F800-E Series Options and Accessories

Model Number	Description	Comments	Stocked Item
FR-A8AX	16 Bit Digital Input Card	BCD or Binary input	S
FR-A8AY	Digital Output / Extended Analog Output Card	2 extra 0-20 mA or 0-10V output signals	S
FR-A8AR	Relay Output Card	3 extra independent type 'C' relays	S
FR-A8ERS-60	A/F800 Series RS485 Option Card		S
FR-A8AN	A/F800 4-20mA I/O Card		S
FR-A8NL	A/F800 Series LONWorks Communication Card		S
FR-A8NC	CC-Link® Communications Card		S
A8NC-CON	CC-Link® Communications Card and Connectors		S
FR-A8ND	DeviceNet™ Communications Card		S
FR-A8NP	PROFIBUS DPV0 Communications Card		S
A8NDPV1	PROFIBUS DPV1 Communications Card		S
FR-A8NF	FL-Net Communications Card		S
A8N-XLT	Multi-protocol RS-485 Communications Card	(BACnet MS/TP), Siemens FLN (P1), Metasys N2	S
A8NEIP-2P	EtherNET™ IP Communications Card		S
A8NPRT-2P	Profinet® Communications Card		S
FR-A8NCE	CC-Link® IE Communications Card		S
FR-A8NCG	CC-Link® IE TSN Communications Card		S
A8NECT-2P	EtherCAT® Communications Card		S
A8NETH-2P	Multi-protocol EtherNET Communications Card	EtherNET IP, MODBUS TCP/IP, Profinet, BACnet IP	S
FR-LU08	Liquid Crystal Operation Panel	Mount on VFD or panel	S
FR-LU08-01	LCD Operational Panel (Hand/Auto Key) HVAC		S
FR-PU07, FR-PU07-01	Parameter Unit	Mount on panel only. FR-PU07-1 is for HVAC	S
FR-PU07BB-L	Parameter Unit with Battery Back-up	Handheld. Can program unpowered drives	S
FR-CB20_ (_ = 1, 3 or 5)	Parameter Unit Connection Cable	1, 3 or 5 meter lengths	S
FR-ADP	Keypad Adaptor Unit	Connect FR-DU08 or FR-LU08 to FR-CB2	S
FR-A8TAT	Control Terminal Block Adaptor	Use FR-A500 or FR-A700 terminal block with FR-A800	S
FR-A8TR	Screw Terminal Block Option	Screw Terminal Block Option	S
FR-HC2	Zero Harmonic Controller	Available for all sizes	S
FR-HEL, FR-HEL-H, FR-HEL-C	DC Link Chokes	Use in accordance with selection guide	S
FR-CONFIGURATOR2	Software Setup Utility for 800 Series		S

Dimensions of REQUIRED DC Link Chokes (sold separately)

Model Number	Height in (mm)	Width in (mm)	Depth in (mm)	Weight (lbs)
FR-HEL-75K	13.39 (340)	5.91 (150)	7.87 (200)	37.4
FR-HEL-90K	13.39 (340)	5.91 (150)	7.87 (200)	41.8
FR-HEL-110K	15.75 (400)	6.89 (175)	7.87 (200)	44
FR-HEL-H75K	12.60 (320)	5.51 (140)	7.28 (185)	35.2
FR-HEL-H90K	13.39 (340)	5.91 (150)	7.48 (190)	44
FR-HEL-H110K	13.39 (340)	5.91 (150)	7.68 (195)	48.4
FR-HEL-H132K	15.94 (405)	6.89 (175)	7.87 (200)	57.2
FR-HEL-H160K	15.94 (405)	6.89 (175)	8.07 (205)	61.6
FR-HEL-H185K	15.94 (405)	6.89 (175)	9.45 (240)	63.8
FR-HEL-H220K	15.94 (405)	6.89 (175)	9.45 (240)	66
FR-HEL-H250K	17.32 (440)	7.48 (190)	9.84 (250)	77
FR-HEL-H280K	17.32 (440)	7.48 (190)	10.04 (255)	83.6
FR-HEL-H315K	19.49 (495)	8.27 (210)	9.84 (250)	92
FR-HEL-H355K	19.49 (495)	8.27 (210)	9.84 (250)	101
FR-HEL-C75K	12.6 (320)	5.5 (140)	7.3 (185)	35
FR-HEL-C90K	13.3 (340)	5.9 (150)	9.4 (240)	44
FR-HEL-C110K	13.3 (340)	5.9 (150)	9.4 (240)	51
FR-HEL-C132K	15.9 (405)	6.9 (175)	7.7 (195)	53
FR-HEL-C185K	15.9 (405)	6.9 (175)	9.4 (240)	70
FR-HEL-C220K	15.9 (405)	6.9 (175)	9.4 (240)	73
FR-HEL-C280K	17.3 (440)	7.5 (190)	9.8 (250)	88

External Heatsink Attachment

Drive Model F/A820	Drive Model F/A840	Model Number	Stocked Item
00105, 00167, 00250	00023, 00038, 00052, 00083, 00126	**FR-A8CN01**	S
00340, 00490	00170, 00250	**FR-A8CN02**	S
00630	00310, 00380	**FR-A8CN03**	S
00770, 00930, 01250	00470, 00620	**FR-A8CN04**	S
01540	00770	**FR-A8CN05**	S
01870, 02330	00930, 01160, 01800	**FR-A8CN06**	S
03160	-	**FR-A8CN07**	S
03800, 04750	03250, 03610	**FR-A8CN08**	S
-	02160, 02600	**FR-A8CN09**	S

NEMA 1 Conduit Mounting Kits for A and FR-F800 Series Drives

Kits have provision for DC link choke installation (Drives in frame sizes A to F do not require a separate kit)

Model Number	A/F820	A/F840	Frame Size
AF8FN-G	01540	00770	G
AF8FN-H	01870	00930	H
	02330	01160	
	-	01800	
AF8FN-J	-	02160	J
	-	02600	
AF8FN-K	03160	-	K
AF8FN-L	03800	03250	L
	04750	03610	
AF8FN-M	-	04320	M
	-	04810	
AF8FN-N	-	05470	N
	-	06100	
	-	06830	

FR-A770 Series

Mitsubishi Electric's RSV technology gives you class-leading power, control and flexibility.



- Designed for use with 690V supplies
- **Wide Speed Range:** 200:1 operating range is possible - even when the drive is used 'open loop'
- **PLC Feature:** FR-A700 programmability provides true intelligence inside the drive – a simple solution for complex applications
- **Easy Gain Tuning:** Compensates automatically for changes in load inertia to ensure smooth and consistent operation
- **Fast Response:** Up to 300 radians / second speed response means lightning-fast reaction to sudden load changes
- **USB Port:** Allows simple connection to the new FR-Configurator software for quick and easy commissioning
- **Power Down Braking:** Keeps the motor under control even if the supply power is lost
- **Remote I/O Capability:** All of the drive I/O can be read or controlled over a network
- **Integral Radio Filter:** Limits Radio Noise emissions to meet EU Directive – all sizes of drive
- **Speed Control:** With or without torque limit allows 200:1 speed range, driving or overhauling
- **Open Loop Torque Control:** Including torque at zero speed

FR-A770 Ratings 690V Class

ND (50°C) 150% OL / 1 min 200% OL / 3 sec.		Model Number	Frame Size	Cooling Method	Protective Rating	Regenerative Braking Torque / Max Value (Permissible Duty)	DC Link Reactor	Stocked Item
HP (*1)	FLA							
400	401 (344)	**FR-A770-79-355K**	P	Forced air cooling	IP00 (*2)	20% torque / continuous	Standard	S
700	611 (545)	**FR-A770-79-560K**						S

Notes:
1. Motor ratings shown are intended as guidelines only - based on 4 pole standard induction motors.
2. Conduit adapter option required for types 00550-03040.

FR-A770 Terminal Connection Diagram

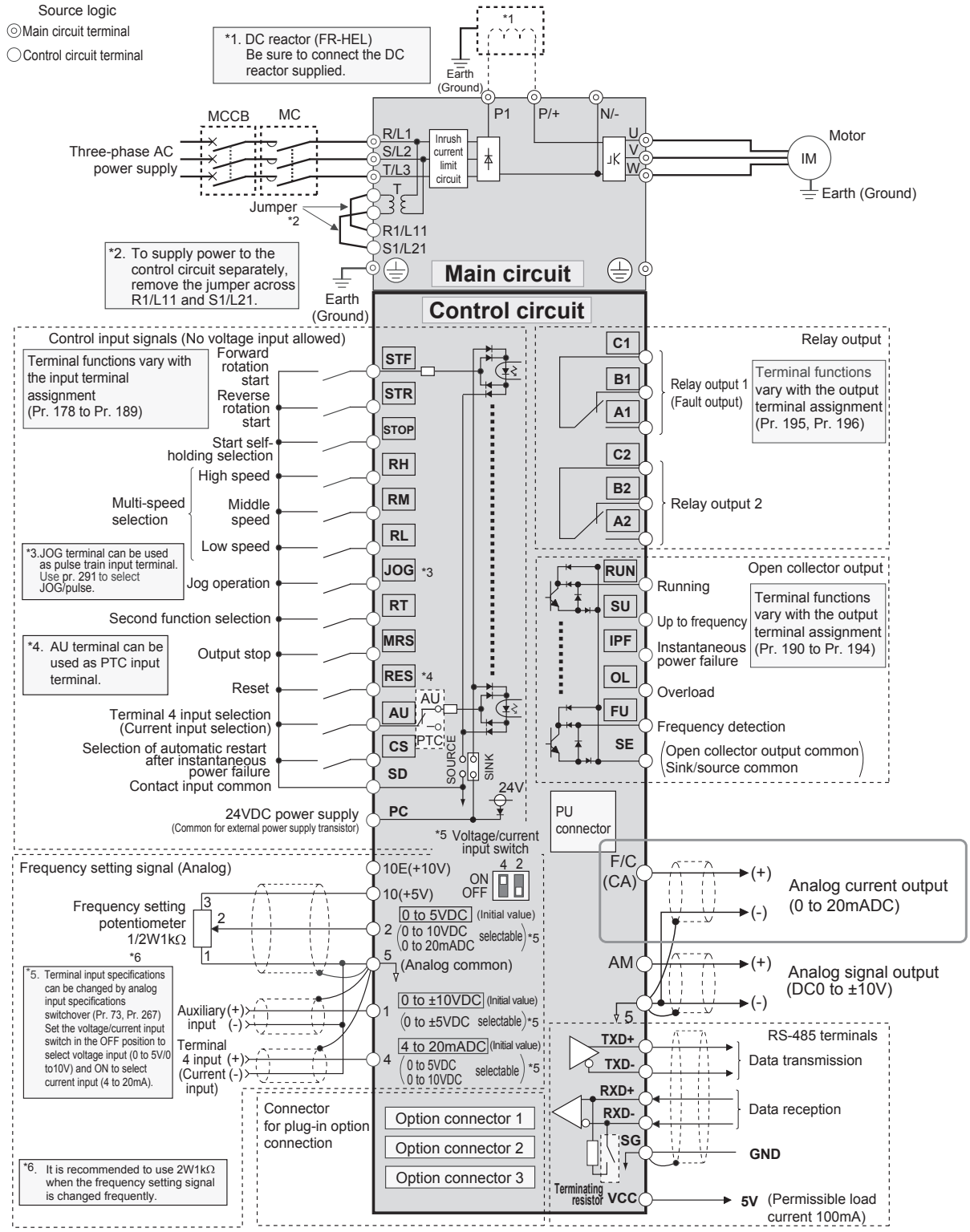

Control Terminal Layout - FR-A770 drives have a 'CA' terminal (0-20 mA output)

A1	B1	C1	A2	B2	C2	10E	10	2	5	4	
RL	RM	RH	RT	AU	STOP	MRS	RES	SD	FM	AM	1
SE	RUN	SU	IPF	OL	FU	SD	SD	STF	STR	JOG	CS	PC

FR-A770 General Specifications

Operation Specifications	Control Method		Soft-PWM control/high carrier frequency PWM control (selectable from among V/F control, advanced magnetic flux vector control and real sensorless vector control) / vector control (when used with option FR-A7AP) (*1)
	Output Frequency Range		0.2 to 400Hz
	Frequency Setting Resolution	Analog Input	0.015Hz/0 to 60Hz (terminal 2, 4: 0 to 10V/12 bit); 0.03Hz/0 to 60Hz (terminal 2, 4: 0 to 5V/11 bit, 0 to 20mA/about 11 bit, terminal 1: 0 to ±10V/12 bit) 0.06Hz/0 to 60Hz (terminal 1: 0 to ±5V/11 bit)
		Digital Input	0.01Hz
	Frequency Accuracy	Analog Input	Within ±0.2% of the max. output frequency (25°C ±10°C)
		Digital Input	Within 0.01% of the set output frequency
	Voltage / Frequency Characteristics		Base frequency can be set from 0 to 400Hz Constant torque/variable torque pattern or adjustable 5 points V/F can be selected
	Starting Torque		200% 0.3Hz (up to frame size C), 150% 0.3Hz (Frame Size D and above) (under real sensorless vector control or vector control)
	Torque Boost		Manual torque boost
	Acceleration / Deceleration Time Setting		0 to 3600s (acceleration and deceleration can be set individually), linear or S-pattern acceleration/deceleration mode, backlash measures acceleration/deceleration can be selected.
	DC Injection Brake		Operation frequency (0 to 120Hz), operation time (0 to 10s), operation voltage (0 to 30%) variable
	Stall Prevention Operation Level		Operation current level can be set (0 to 220% adjustable), whether to use the function or not can be selected
	Torque Limit Level		Torque limit value can be set (0 to 400% variable)
	Frequency Setting Signal	Analog Input	Terminal 2: 4: 0 to 10V, 0 to 5V, 4 to 20mA can be selected • Terminal 1:-10 to +10V, -5 to +5V can be selected
		Digital Input	Input using the setting dial of the operation panel or parameter unit. Four-digit BCD or 16 bit binary (when used with option FR-A7AX)
	Start Signal		Forward and reverse rotation or start signal automatic self-holding input (3-wire input) can be selected.
	Input Signal		Select any twelve signals using Pr. 178 to Pr. 189 (input terminal function selection) from among multi speed selection, remote setting, stop-on-contact, second function selection, third function selection, terminal 4 input selection, JOG operation selection, selection of automatic restart after instantaneous power failure, flying start, external thermal relay input, inverter operation enable signal (FR-HC/FR-CV connection), FR-HC connection (instantaneous power failure detection), PU operation/external inter lock signal, external DC injection brake operation start, PID control enable terminal, brake opening completion signal, PU operation/external operation switchover, load pattern selection forward rotation reverse rotation boost, V/F switching, load torque high-speed frequency, S-pattern acceleration/deceleration C switchover, pre-excitation, output stop, start self-holding selection, control mode changing, torque limit selection, start-time tuning start external input, torque bias selection 1, 2 (*1), P/PI control switchover, forward rotation command, reverse rotation command, inverter reset, PTC thermistor input, PID forward reverse operation switchover, PU-NET operation switchover, NET-external operation switchover, and command source switchover, conditional position pulse train sign (*1), conditional position droop pulse clear (*1).
	Pulse Train Input		100kpps
	Operational Functions		Maximum/minimum frequency setting, frequency jump operation, external thermal relay input selection, polarity reversible operation, automatic restart after instantaneous power failure operation, commercial power supply-inverter switchover operation, forward/reverse rotation prevention, remote setting, brake sequence, second function, third function, multi-speed operation, original operation continuation at instantaneous power failure, stop-on-contact control, load torque high speed frequency control, droop control, regeneration avoidance, slip compensation, operation mode selection, offline auto tuning function, online auto tuning function, PID control, computer link operation (RS-485), motor end orientation (*1), machine end orientation (*1), pre-excitation, notch filter, machine analyzer (*1), easy gain tuning, speed feed forward, and torque bias (*1)
	Output Signals	Operating Status	Select any signals using Pr. 190 to Pr. 196 (output terminal function selection) from among inverter running, up-to-frequency, instantaneous power failure/undervoltage, overload warning, output frequency (speed) detection, second output frequency (speed) detection, third output frequency (speed) detection, regenerative brake prealarm, electronic thermal relay function pre-alarm, PU operation mode, inverter operation ready, output current detection, zero current detection, PID lower limit, PID upper limit, PID forward rotation reverse rotation output, commercial power supply-inverter switchover MC1, commercial power supply-inverter switchover MC2, commercial power supply-inverter switchover MC3, orientation completion (*1), brake opening request, fan fault output, heatsink overheat pre-alarm , inverter running/start command on, deceleration at an instantaneous power failure, PID control activated, during retry, PID output interruption, life alarm, alarm output 1, 2, 3 (power-off signal), power savings average value update timing, current average monitor, maintenance timer alarm, remote output, forward rotation output (*1), reverse rotation output (*1), low speed output, torque detection, regenerative status output (*1), start-time tuning completion, in-position completion (*1), minor failure output and alarm output. Open collector output (5 points), relay output (2 points) and alarm code of the inverter can be output (4 bit) from the open collector.
		Using FR-A7AY, FR-A7AR (Optional)	In addition to the above, select any signals using Pr. 313 to Pr. 319 (extension output terminal function selection) from among control circuit capacitor life, main circuit capacitor life, cooling fan life, inrush current limit circuit life (only positive logic can be set for extension terminals of the FR-A7AR).
	Pulse Train Input		500kpps
	Pulse / Analog Output		Select any signals using Pr. 54 FM terminal function selection (pulse train output) and Pr. 158 AM terminal function selection (analog output) from among output frequency, motor current (steady or peak value), output voltage, frequency setting, operation speed, motor torque, converter output voltage (steady or peak value), electronic thermal relay function load factor, input power, output power, load meter, motor excitation current, reference voltage output, motor load factor, power saving effect, regenerative brake duty, PID set point, PID measured value, motor output, torque command, torque current command, and torque monitor.
Indication	PU (FR-DU07 / FR-PU07)	Operating Status	Output frequency, motor current (steady or peak value), output voltage, frequency setting, running speed, motor torque, overload, converter output voltage (steady or peak value), electronic thermal relay function load factor, input power, output power, load meter, motor excitation current, cumulative energization time, actual operation time, motor load factor, cumulative power, energy saving effect, cumulative saving power, regenerative brake duty, PID set point, PID measured value, PID deviation, inverter I/O terminal monitor, input terminal option monitor (*2), output terminal option monitor (*2), option fitting status (*3), terminal assignment status (*3), torque command, torque current command, feedback pulse (*1), motor output
		Alarm Definition	Alarm definition is displayed when the protective function is activated, the output voltage/current/frequency/cumulative energization time right before the protection function was activated and past 8 alarm definitions are stored.
		Interactive Guidance	Operation guide/trouble shooting with a help function (*3)
Protective / Warning Function			Overcurrent during acceleration, overcurrent during constant speed, overcurrent during deceleration, overvoltage during acceleration, overvoltage during constant speed, overvoltage during deceleration, inverter protection thermal operation, motor protection thermal operation, heatsink overheat, instantaneous power failure occurrence, undervoltage, input phase failure, motor overload, output side earth (ground) fault overcurrent, output short circuit, main circuit element overheat, output phase failure, external thermal relay operation, PTC thermistor operation, option alarm, parameter error, PU disconnection, retry count excess, CPU alarm, operation panel power supply short circuit, 24VDC power output short circuit, output current detection value excess, inrush current limit circuit alarm, communication alarm (inverter), USB error, opposite rotation deceleration error, analog input error, fan fault, overcurrent stall prevention, overvoltage stall prevention, regenerative brake prealarm, electronic thermal relay function prealarm, PU stop, maintenance timer alarm (*2), brake transistor alarm, parameter write error, copy operation error, operation panel lock, parameter copy alarm, speed limit indication, encoder no-signal (*1), speed deviation large (*1), overspeed (*1), position error large (*1), encoder phase error (*1)
Environment	Ambient Temperature		-10°C to +50°C (non-freezing)
	Ambient Humidity		90%RH maximum (non-condensing)
	Storage Temperature (*4)		-20°C to +65°C
	Atmosphere		Indoors (without corrosive gas, flammable gas, oil mist, dust and dirt etc.)
	Altitude / Vibration		Maximum 1000m above sea level, 0.6 G or less (conforms to JIS C 60068-2-6) (*5)

Notes:
1. Available only when the option (FR-A7AP) is mounted
2. Can be displayed only on the operation panel (FR-DU07).
3. Can be displayed only on the parameter unit (FR-PU07).
4. Temperature applicable for a short period in transit, etc.
5. 2.9m/s^2 or less for the FR-A740-03250 or more.

FR-A770 Options

Function / Options

		Model No.	Stocked Item
Function	120VAC Control Input	FR-A7AC	S
	Analog I/O	FR-A7AN	S
	Encoder Feedback	FR-A7AP	S
	Encoder Pulse Dividing Output	FR-A7AL	S
	Relay Output	FR-A7AR	S
	12 Bit Digital Input	FR-A7AX	S
	Digital Output	FR-A7AY	S
	Ext. Analog Output		
	BiPolar Analog Output	FR-A7AZ	-
	High Res Analog Input		
	Motor Thermistor		
Communication	CC-Link®	FR-A7NC	S
	DeviceNet™	FR-A7ND	S
	LONWORKS®	FR-A7NL	S
	PROFIBUS® DP	FR-A7NP	S
	SSCNET III	FR-A7NS	S

Software

Model Number	Description	Stocked Item
FR-CONFIGURATOR	Programming and diagnostic software	S

Building Management Options

	Network Type/Model	A7NETH-2P	FR-A7N-XLT
Direct Option	BACnet®/IP	X	-
	EtherNet/IP™	X	-
	MODBUS® TCP	X	-
	PROFINET® IO	X	-
Gateway Option	BACnet® MS/TP	-	X
	Metasys® N2	-	X
	Siemens FLN (P1)	-	X
	Stocked Item	S	S

Parameter Units / Parameter Copy Units

Parameter units are used for operator control, reading and writing parameters, and drive monitoring. Parameter Copy Units also read the drive parameter settings and copy them into non-volatile memory, and can write them into other drives.

Model Number	Description	Stocked Item
FR-CB201	Extension cable straight plugs on both ends - 1M	S
FR-CB203	Extension cable straight plugs on both ends - 3M	S
FR-CB205	Extension cable straight plugs on both ends - 5M	S
FR-DU07	Control Panel for A700	S
FR-PU07	LCD Multi-lingual Parameter Copy Unit (English, French, Spanish, German, Italian, Swedish, Finnish, Japanese) for operator control, parameter read/write and monitoring. Stores settings in non-volatile memory. Built-in parameter copy capability. (F/A700 based)	S
FR-ADP	FR-DU07 panel mounting adapter	S
SC-FRPC	Serial communication cable	S
FR-PU07BB-L	Battery powered PU07	S
FR-RJ45-HUB4	Serial network hub - 2 stations	-
FR-RJ45-HUB10	Serial network hub - 8 stations	-
FR-RJ45-TR	Terminating resistor for FR-RJ45-HUB	-

FR-A701 Series

Vector VFD with built-in Line Regeneration.

- Ideal for applications with continuous overhauling or large inertia loads
- **Capacity:** up to 75HP for 240V and 480V applications
- Braking torque
  - 100% continuous
  - 150% for up to 60 sec.
- **Vector Mode with Encoder:** Allows speed, torque and position control
- **Real Sensorless Mode:** allows speed and torque control without encoder
- **Starting Torque:** 150% at 0.3Hz
- 2 serial ports (RS-485) and 1 USB port
- 3 option ports for plug-in network or function expansion options
- 12 programmable digital inputs (sink/source selectable)
- 5 programmable digital outputs (sink/source selectable)
- 2 form C relays
- 3 analog inputs
- Terminal 2 (0~5VDC, 0~10VDC, 0~20mA selectable)
- Terminal 1 (0 to ±5VDC or 0 to ±10VDC selectable)
- Terminal 4 (0~5VDC, 0~10VDC, 4~20mA selectable)
- 2 analog outputs (0~10VDC and pulse train out)
- MODBUS® RTU and Mitsubishi VFD serial protocol communications
- UL and cUL listed. CE marked (480V version only)



FR- ❶ - ❷

❶ Voltage

Symbol	Voltage Class
A721	3-phase 240V class
A741	3-phase 480V class

❷ Capacity

Symbol
Inverter capacity kW 5.5K = 5.5kW 0.746kW = 1HP

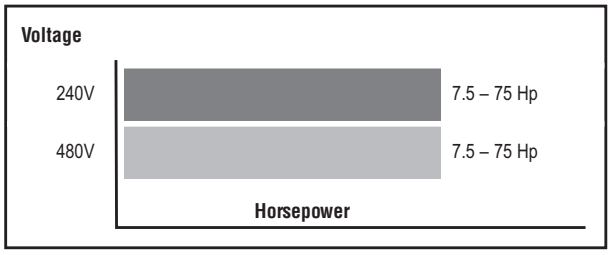

FR-A701 Ratings

Note: There is no PLC function as included in the standard FR-A700

Rating (CT & VT)		IP00 Open Chassis Model Number	Dimensions in Inches (mm)			Weight Lbs (kg)	Stocked Item
HP	Rated Amps		Height	Width	Depth		
3-Phase 200~240VAC Input & Output							
7.5	24	**FR-A721-5.5K**	18.5 (470)	9.9 (250)	10.7 (270)	44.1 (20)	-
10	33	**FR-A721-7.5K**	18.5 (470)	9.9 (250)	10.7 (270)	48.5 (22)	-
15	46	**FR-A721-11K**	21.6 (540)	11.9 (300)	11.6 (294)	72.7 (33)	-
20	61	**FR-A721-15K**	21.6 (540)	11.9 (300)	11.6 (294)	77.1 (35)	-
25	76	**FR-A721-18.5K**	23.7 (600)	15.4 (390)	12.6 (320)	110.2 (50)	-
30	90	**FR-A721-22K**	23.7 (600)	15.4 (390)	12.6 (320)	114.6 (52)	-
40	115	**FR-A721-30K**	27.6 (700)	17.8 (450)	13.4 (340)	152.0 (69)	-
50	145	**FR-A721-37K**	27.6 (700)	18.5 (470)	14.5 (368)	191.7 (87)	-
60	175	**FR-A721-45K**	27.6 (700)	18.5 (470)	14.5 (368)	198.3 (90)	-
75	215	**FR-A721-55K**	35.5 (900)	23.7 (600)	16.0 (405)	264.4 (120)	-
3-Phase 380~480VAC Input & Output							
7.5	12	**FR-A741-5.5K**	18.5 (470)	9.9 (250)	10.7 (270)	55.1 (25)	-
10	17	**FR-A741-7.5K**	18.5 (470)	9.9 (250)	10.7 (270)	57.3 (26)	-
15	23	**FR-A741-11K**	21.6 (540)	11.9 (300)	11.6 (294)	81.5 (37)	-
20	31	**FR-A741-15K**	21.6 (540)	11.9 (300)	11.6 (294)	88.1 (40)	-
25	38	**FR-A741-18.5K**	23.7 (600)	14.2 (360)	12.6 (320)	105.8 (48)	-
30	44	**FR-A741-22K**	23.7 (600)	14.2 (360)	12.6 (320)	108.0 (49)	-
40	57	**FR-A741-30K**	27.6 (700)	17.8 (450)	13.4 (340)	143.2 (65)	-
50	71	**FR-A741-37K**	27.6 (700)	18.5 (470)	14.5 (368)	176.3 (80)	-
60	86	**FR-A741-45K**	27.6 (700)	18.5 (470)	14.5 (368)	182.9 (83)	-
75	110	**FR-A741-55K**	35.5 (900)	23.7 (600)	16.0 (405)	253.3 (115)	-

FR-A701 General Specifications

Operation Specifications	Control Method		Soft-PWM control/high carrier frequency PWM control (selectable from among V/F control, advanced magnetic flux vector control and real sensorless vector control) / vector control (*1)
	Output Frequency Range		0.2 to 400Hz (The maximum frequency is 120Hz under real sensorless vector control and vector control.) (*1)
	Frequency Setting Resolution	Analog Input	0.015Hz/0 to 60Hz (terminal 2, 4: 0 to 10V/12bit); 0.03Hz/0 to 60Hz (terminal 2, 4: 0 to 5V/11bit, 0 to 20mA/about 11bit, terminal 1: 0 to ±10V/12bit); 0.06Hz/0 to 60Hz (terminal 1: 0 to ±5V/11bit)
		Digital Input	0.01Hz
	Frequency Accuracy	Analog Input	Within ±0.2% of the max. output frequency (25°C ±10°C)
		Digital Input	Within 0.01% of the set output frequency
	Voltage / Frequency Characteristics		Base frequency can be set from 0 to 400Hz Constant torque/variable torque pattern or adjustable 5 points V/F can be selected
	Starting Torque		150% 0.3Hz (under real sensorless vector control or vector control) (*1)
	Torque Boost		Manual torque boost
	Acceleration / Deceleration Time Setting		0 to 3600s (acceleration and deceleration can be set individually), linear or S-pattern acceleration/deceleration mode, backlash measures acceleration/deceleration can be selected.
	DC Injection Brake		Operation frequency (0 to 120Hz), operation time (0 to 10s), operation voltage (0 to 30%) variable
	Stall Prevention Operation Level		Operation current level can be set (0 to 220% adjustable), whether to use the function or not can be selected
	Torque Limit Level		Torque limit value can be set (0 to 400% variable)
	Frequency Setting Signal	Analog Input	Terminal 2, 4: 0 to 10V, 0 to 5V, 4 to 20mA (0 to 20mA) can be selected • Terminal 1: -10 to +10V, -5 to +5V can be selected
		Digital Input	Input using the setting dial of the operation panel or parameter unit; Four-digit BCD or 16 bit binary (when used with option FR-A7AX)
	Start Signal		Forward and reverse rotation or start signal automatic self-holding input (3-wire input) can be selected.
	Input Signal		You can select any twelve signals using Pr. 178 to Pr. 189 (input terminal function selection) from among multi speed selection, remote setting, stop-on-contact, second function selection, third function selection, terminal 4 input selection, JOG operation selection, selection of automatic restart after instantaneous power failure, flying start, external thermal relay input, PU operation/external inter lock signal , external DC injection brake operation start, PID control enable terminal, brake opening completion signal, PU operation/external operation switchover, load pattern selection forward rotation reverse rotation boost, V/F switching, load torque high-speed frequency, S-pattern acceleration/deceleration C switchover, pre-excitation, output stop, start self-holding selection, control mode changing, torque limit selection, start-time tuning start external input, torque bias selection 1, 2 (*1), P/PI control switchover, forward rotation command, reverse rotation command, inverter reset, PTC thermistor input, PID forward reverse operation switchover, PU-NET operation switchover, NET-external operation switchover, and command source switchover, conditional position pulse train sign (*1), conditional position droop pulse clear (*1), magnetic flux decay output shutoff.
	Pulse Train Input		100kpps
	Operational Functions		Maximum/minimum frequency setting, frequency jump operation, external thermal relay input selection, polarity reversible operation, automatic restart after instantaneous power failure operation, electronic bypass operation, forward/reverse rotation prevention, remote setting, brake sequence, second function, third function, multi-speed operation, original operation continuation at instantaneous power failure, stop-on-contact control, load torque high speed frequency control, droop control, regeneration avoidance, slip compensation, operation mode selection, offline auto tuning function, online auto tuning function, PID control, computer link operation (RS-485), motor end orientation (*1), pre-excitation, notch filter, easy gain tuning, speed feed forward, and torque bias (*1)
	Output Signals	Operating Status	You can select any signals using Pr. 190 to Pr. 196 (output terminal function selection) from among inverter running, up-to-frequency, instantaneous power failure/undervoltage, overload warning, output frequency (speed) detection, second output frequency (speed) detection, third output frequency (speed) detection, electronic thermal relay function pre-alarm, PU operation mode, inverter operation ready, output current detection, zero current detection, PID lower limit, PID upper limit, PID forward rotation reverse rotation output, electronic bypass MC1, electronic bypass MC2, electronic bypass MC3, orientation complete (*1), brake opening request, fan fault output, heatsink overheat pre-alarm , inverter running/start command on, deceleration at an instantaneous power failure, PID control activated, during retry, PID output interruption, life alarm, fault output 1, 2, 3 (power-off signal), power savings average value update timing, current average monitor, maintenance timer alarm, remote output, forward rotation output (*1), reverse rotation output (*1), low speed output, torque detection, regenerative status output (*1), start-time tuning completion, in-position completion (*1), alarm output and fault output. Open collector output (5 points), relay output (2 points) and alarm code of the inverter can be output (4 bit) from the open collector.
		When Used with the FR-A7AY, FR-A7AR (Optional)	In addition to the above, you can select any signals using Pr. 313 to Pr. 319 (extension output terminal function selection) from among control circuit capacitor life, main circuit capacitor life, cooling fan life, inrush current limit circuit life. (only positive logic can be set for extension terminals of the FR-A7AR)
	Pulse Train Input		500kpps
	Pulse / Analog Output		Select any signals using Pr. 54 FM terminal function selection (pulse train output) and Pr. 158 AM terminal function selection (analog output) from among output frequency, motor current (steady or peak value), output voltage, frequency setting, operation speed, motor torque, converter output voltage (steady or peak value), electronic thermal relay function load factor, input power, output power, load meter, motor excitation current, reference voltage output, motor load factor, power saving effect, PID set point, PID measured value, motor output, torque command, torque current command, and torque monitor.
Indication	PU (FR-DU07 / FR-PU07)	Operating Status	Output frequency, motor current (steady or peak value), output voltage, frequency setting, running speed, motor torque, overload, converter output voltage (steady or peak value), electronic thermal relay function load factor, input power, output power, load meter, motor excitation current, cumulative energization time, actual operation time, motor load factor, cumulative power, energy saving effect, cumulative saving power, PID set point, PID measured value, PID deviation, inverter I/O terminal monitor, input terminal option monitor (*2), output terminal option monitor (*2), option fitting status (*3), terminal assignment status (*3), torque command, torque current command, feedback pulse (*1), motor output
		Fault Definition	Fault definition is displayed during the fault occurs, the output voltage/current/frequency/cumulative energization time right before the fault occurs and past 8 fault definitions are stored.
		Interactive Guidance	Operation guide/trouble shooting with a help function (*3)
Protective / Warning Function			Overcurrent during acceleration, overcurrent during constant speed, overcurrent during deceleration, overvoltage during acceleration, overvoltage during constant speed, overvoltage during deceleration, inverter protection thermal operation, motor protection thermal operation, heatsink overheat, instantaneous power failure occurrence, undervoltage, input phase failure, motor overload, output side earth (ground) fault overcurrent, output short circuit, main circuit element overheat, output phase failure, external thermal relay operation (*5), PTC thermistor operation (*5), option alarm, parameter error, PU disconnection, retry count excess (*5), CPU alarm, operation panel power supply short circuit, 24VDC power output short circuit, output current detection value excess (*5), inrush current limit circuit alarm, communication alarm (inverter), opposite rotation deceleration error*5, analog input error, fan fault, overcurrent stall prevention, overvoltage stall prevention, electronic thermal relay function prealarm, PU stop, maintenance timer alarm (*2) (*5), parameter write error, copy operation error, operation panel lock, parameter copy alarm, speed limit indication, signal loss detection (*1) (*5), speed deviation large (*1) (*5), overspeed (*1) (*5), excessive position error (*1) (*5), brake sequence error (*5), encoder phase error (*1) (*5), regeneration converter overcurrent, regeneration converter circuit fault, regeneration converter transistor protection thermal
Environment	Ambient Temperature		-10°C to +50°C (non-freezing)
	Ambient Humidity		90%RH maximum (non-condensing)
	Storage Temperature (*4)		-20°C to +65°C
	Atmosphere		Indoors (without corrosive gas, flammable gas, oil mist, dust and dirt etc.)
	Altitude / Vibration		Maximum 1000m above sea level, 5.9m/s^2 or less

Notes:
1. Available only when the option (FR-A7AP) is mounted.
2. Can be displayed only on the operation panel (FR-DU07).
3. Can be displayed only on the parameter unit (FR-PU07).
4. Temperature applicable for a short period in transit, etc.
5. This protective function does not function in the initial status.

FR-A701 Terminal Connection Diagram

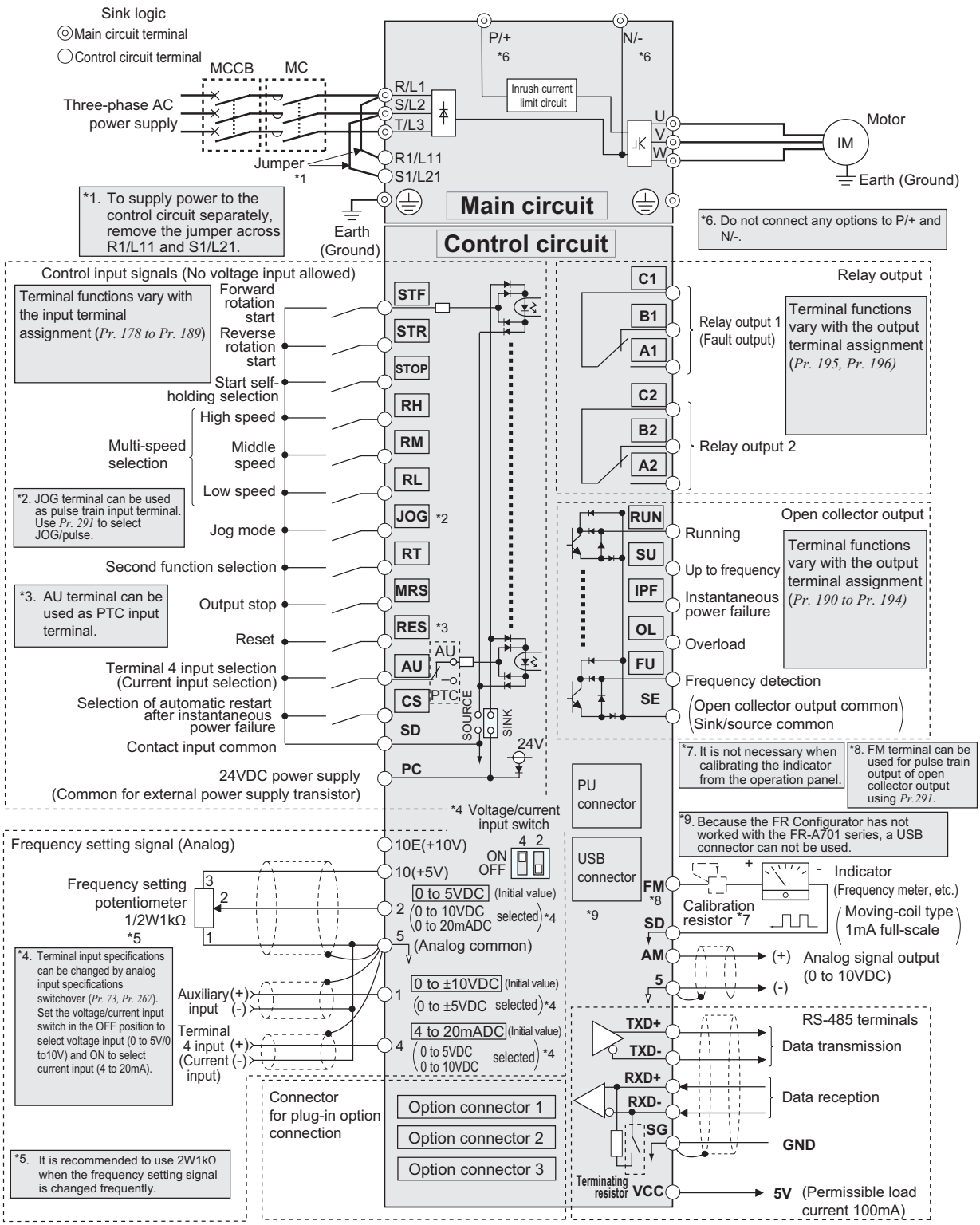

FR-A701 Control Terminal Layout

A1	B1	C1	A2	B2	C2	10E	10	2	5	4	
RL	RM	RH	RT	AU	STOP	MRS	RES	SD	FM	AM	1
SE	RUN	SU	IPF	OL	FU	SD	SD	STF	STR	JOG	CS	PC

FR-A701 Options

Function/Options

		Model Number	Stocked Item
Function	120VAC Control Input	FR-A7AC	S
	Analog I/O	FR-A7AN	S
	Encoder Feedback	FR-A7AP	S
	Encoder Pulse Dividing Output	FR-A7AL	S
	Relay Output	FR-A7AR	S
	12 Bit Digital Input	FR-A7AX	S
	Digital Output	FR-A7AY	S
	Ext. Analog Output		
	BiPolar Analog Output	FR-A7AZ	-
	High Res Analog Input		
	Motor Thermistor		
Communication	CC-Link®	FR-A7NC	S
	DeviceNet™	FR-A7ND	S
	LONWORKS®	FR-A7NL	S
	PROFIBUS DP®	FR-A7NP	S
	SSCNET III	FR-A7NS	S

Note 1: FR-A701 Series supports only the above listed plug-in options. Those options not listed cannot be used with the FR-A701 Series.

Building Management Options

	Network Type/Model	A7NETH-2P	FR-A7N-XLT
Direct Option	BACnet®/IP	X	-
	EtherNet/IP™	X	-
	MODBUS® TCP	X	-
	PROFINET® IO	X	-
Gateway Option	BACnet® MS/TP	-	X
	Metasys® N2	-	X
	Siemens FLN (P1)	-	X
	Stocked Item	S	S

Software

Model Number	Description	Stocked Item
FR-CONFIGURATOR	Programming and diagnostic software (Ver. 3.20 or greater)	S

Parameter Units / Parameter Copy Units

Parameter units are used for operator control, reading and writing parameters, and drive monitoring. Parameter Copy Units also read the drive parameter settings and copy them into non-volatile memory, and can write them into other drives.

Model Number	Description	Stocked Item
FR-CB201	Extension cable straight plugs on both ends - 1 meter	S
FR-CB203	Extension cable straight plugs on both ends - 3 meters	S
FR-CB205	Extension cable straight plugs on both ends - 5 meters	S
FR-DU07	Control Panel	S
FR-PU07	LCD Multi-lingual Parameter Copy Unit (English, French, Spanish, German, Italian, Swedish, Finnish, Japanese) for operator control, parameter read/write and monitoring. Stores settings in non-volatile memory. Built-in parameter copy capability. (F/A700 based)	S
FR-ADP	FR-DU07 panel mounting adapter	S
SC-FRPC	Serial Communication Cable	S
FR-PU07BB-L	Battery Powered PU07	S
FR-RJ45-HUB4	Serial Network Hub - 2 Stations	-
FR-RJ45-HUB10	Serial Network Hub - 8 Stations	-
FR-RJ45-TR	Terminating Resistor for FR-RJ45-HUB	-

FR-A800-E Series

The FR-A800-E adds an integrated web server and 100Mbit Ethernet TCP/IP connectivity as standard to the existing network options of the FR-A800 flagship multi-use inverter. The FR-A800-E provides machine builders and systems integrators an increased ability for remote system monitoring and parameter adjustment, as well as easy integration into existing network environments.

- **High Speed Response:** With a speed response of 50Hz, FR-A800 to respond to a change in motor load. FR-A800 reacts to a speed signal much faster too – between 2 to 3 ms as opposed to 5 to 20 ms with FR-A700.
- **Wide Speed Range:** 200:1 speed range open loop, 1500:1 closed loop speed range.
- **Extended Maximum Speed:** A standard FR-A800 VFD can drive high speed motors at up to 590Hz, compared to the FR-A700's 400Hz.
- **IPM Motor Control:** Standard FR-A800 VFDs can drive the new generation IPM (Internal Permanent Magnet) motors, such as the Marathon 'SyMAX' Series.
- **Safety Stop:** FR-A800 is a SAFETY drive. "STO" capability enables SIL2 / PLd category emergency stops.
- **Compatible with USB Stick:** VFD settings can be easily uploaded or downloaded and 'black box' operating data at the time of a drive trip can be copied for diagnosis using the FR-Configurator software.
- **GOT Interface:** Automatic connectivity to GOT 2000 series GOTs without the need to change any parameters.
- **Improved PLC**: FR-A800 has a new internal PLC based around the Mitsubishi Electric 'L Series' processor. Instructions in the form of 'Function Blocks' can now be used.
- **Conformal Coating:** All FR-A800 VFDs have Conformal Coated boards as standard.
- **Separate Rectifier Stage:** For drives over 500 HP – greater system flexibility.
- **Ethernet Communications as Standard –** Communicate with MODBUS TCP/IP or CC-Link IE Field Basic communications networks at a speed of 100Mbps without the need for an extra option card.
- **Automatic IP Address Detection –** Automatically detect the IP address of all connected drives, quickly enabling connection and programming using FR-Configurator2 software.
- **Multiple Protocol Capability –** Network option cards offer connection to other drive-based networks and a higher level information system.
- **Drive to Drive Communications –** Utilize the internal PLC to communicate without a master PLC controller allowing the drives to work together as a team.



FR-A8 ❶ 0- ❷ ❸ ❹

❶ Voltage

Symbol	Voltage Class
2	200V class
4	400V class
6	600V class

❷ Capacity

Symbol	Description
100023 to 068301	Inverter SLD rated current (A)
0.4 to 280K	Inverter ND rated capacity (kW)

❸ Communication

Symbol	Type (*1)	Communication Type
E1	FM	Ethernet (*2)
E2	CA	

❹ Circuit Board

Symbol	Circuit Board Coating (conforming to IEC60721-3-3 3C2/3S2)	Plated Conductor
None	Without	Without
60	With	Without
06 (*3)	With	With

1. Specification differs by the type. Major differences are shown in the table below.
2. Inverter equipped with a built-in Ethernet board (FR-A8ETH).
3. Applicable for the FR-A820-00340(5.5K) or higher, and the FR-A840-00170(5.5K) or higher

Type	Monitor Output	Initial Setting			
		Built-in EMC Filter	Control Logic	Rated Frequency	Pr.19 Base Frequency Voltage
FM (Terminal FM Equipped Model)	Terminal FM: pulse train output Terminal AM: analog voltage output (0 to ±10 VDC)	OFF	Sink logic	60 Hz	9999 (same as the power supply voltage)
CA (Terminal CA Equipped Model)	Terminal CA: analog current output (0 to 20 mADC) Terminal AM: analog voltage output (0 to ±10 VDC)	ON	Source logic	50 Hz	8888 (95% of the power supply voltage)

FR-A800-E Ratings 240V Class

Model Number	AMPS for Duty				Horsepower For Duty (NEC)				Frame Size	Weight	Cooling Method	Protective Rating	Regen. Braking Torque / Duty Using Standard Brake Resistors Where Supplied	Stocked Item
	SLD	LD	ND	HD	SLD	LD	ND	HD						
FR-A820-00046-E1N6	4.6	4.2	3	1.5	1		0.75	0.25	A	5.5	Self-Cooling	NEMA 1, UL-1, Plenum Rated (IP20)	150% torque / 3% ED	S
FR-A820-00077-E1N6	7.7	7	5	3	2		1	0.5	B	5.9				S
FR-A820-00105-E1N6	10.5	9.6	8	5	3		2	1	C	8.8	Forced Air Cooling			S
FR-A820-00167-E1N6	16.7	15.2	11	8	5		3	2	C	8.8			100% torque / 3% ED	S
FR-A820-00250-E1N6	25	23	17.5	11	7.5		5	3	C	8.8				S
FR-A820-00340-E1N6	34	31	24	17.5	10		7.5	5	D	16.7			100% torque / 2% ED	S
FR-A820-00490-E1N6	49	45	33	24	20	15	10	7.5	D	16.7				S
FR-A820-00630-E1N6	63	58	46	33	20		15	10	E	20.5			20% torque / 100% ED (Brake transistor included)	S
FR-A820-00770-E1N6	77	70.5	61	46	25		20	15	F	37.4				S
FR-A820-00930-E1N6	93	85	76	61	30		25	20	F	37.4				S
FR-A820-01250-E1N6	125	114	90	76	40		30	25	F	37.4				S
FR-A820-01540-E160	154	140	115	90	60	50	40	30	G	48.4		IP00	20% torque / 100% ED (Use FR-BU2 brake unit for higher ratings)	S
FR-A820-01870-E160	187	170	145	115	60		50/60	40	H	92.4				S
FR-A820-02330-E160	233	212	175	145	75		60	50	H	92.4				S
FR-A820-03160-E160 (*1)	316	288	215	175	125	100	75	60	K	118.8				S
FR-A820-03800-E1U6 (*1)	380	346	288	215	150	125	100	75	L	162.8				S
FR-A820-04750-E1U6 (*1)	475	432	346	288	150		125	100	L	162.8				S

Note 1: These drives must be used together with a DC Link Choke, sold separately.
SLD- 110% 60s, 120% 3s (inverse-time characteristics) at ambient temperature 40°C
LD- 120% 60s, 150% 3s (inverse-time characteristics) at ambient temperature 50°C
ND- 150% 60s, 200% 3s (inverse-time characteristics) at ambient temperature 50°C
HD- 200% 60s, 250% 3s (inverse-time characteristics) at ambient temperature 50°C

FR-HEL DC Link Chokes (sold separately)

Model Number	SLD	LD	ND	HD
FR-A820-03160-E160	FR-HEL-90K	FR-HEL-75K	-	-
FR-A820-03800-E1U6	FR-HEL-110K	FR-HEL-90K	FR-HEL-75K	-
FR-A820-04750-E1U6	FR-HEL-110K	FR-HEL-110K	FR-HEL-90K	FR-HEL-75K

FR-A800-E Ratings 480V Class

Model Number	AMPS For Duty				Horsepower For Duty (NEC)				Frame Size	Weight (lbs) (*4)	Cooling Method	Protective Rating	Regen.Braking Torque / Duty (Using Standard Brake Resistors Where Supplied)	Stocked Item
	SLD	LD	ND	HD	SLD	LD	ND	HD						
FR-A840-00023-E1N6	2.3	2.1	1.5	0.8	1	1	0.5	0.25	C	7.7	Self-Cooling	NEMA 1, UL-1, Plenum Rated (IP20)	100% torque / 2% ED	S
FR-A840-00038-E1N6	3.8	3	2.5	1.5	2	2	1	0.5		7.7				S
FR-A840-00052-E1N6	5.2	4.8	4	2.5	3	3	2	1		7.7				S
FR-A840-00083-E1N6	8.3	7.6	6	4	5	5	3	2		8.8	Forced Air Cooling			S
FR-A840-00126-E1N6	12.6	11.5	9	6	7.5	7.5	5	3		8.8				S
FR-A840-00170-E1N6	17	16	12	9	10	10	7.5	5	D	16.7				S
FR-A840-00250-E1N6	25	23	17	12	15	15	10	7.5		16.7				S
FR-A840-00310-E1N6	31	29	23	17	20	20	15	10	E	20.5			20% torque / 100% ED (Brake transistor included)	S
FR-A840-00380-E1N6	38	35	31	23	25	25	20	15		20.5				S
FR-A840-00470-E1N6	47	43	38	31	30	30	25	20	F	37.4				S
FR-A840-00620-E1N6	62	57	44	38	40	40	30	25		37.4				S
FR-A840-00770-E160	77	70	57	44	60	50	40	30	G	50.6		IP00		S
FR-A840-00930-E160	93	85	71	57	60	60	50	40	H	90.2				S
FR-A840-01160-E160	116	106	86	71	75	75	60	50		90.2				S
FR-A840-01800-E160 (*1)	180	144	110	86	150	100	75	60		94.6				S
FR-A840-02160-E1U6 (*1)	216	180	144	110	150	150	100	75	J	114.4			10% torque / 100% ED (Use FR-BU2-H for higher ratings)	S
FR-A840-02600-E1U6 (*1)	260	216	180	144	200	150	150	100		121.0				S
FR-A840-03250-E1U6 (*1)	325	260	216	180	250	200	150	150	L	156.2				S
FR-A840-03610-E1U6 (*1)	361	325	260	216	300	250	200	150		171.6				S
FR-A840-04320-E1U6 (*1)	432	361	325	260	350	300	250	200	M	257.4				S
FR-A840-04810-E1U6 (*1)	481	432	361	325	400	350	300	250		257.4				S
FR-A840-05470-E1U6 (*1)	547	481	432	361	450	400	350	300	N	365.2				S
FR-A840-06100-E1U6 (*1)	610	547	481	432	500	450	400	350		365.2				S
FR-A840-06830-E1U6 (*1)	683	610	547	481	550	500	450	400		365.2				S
FR-A842-07700-E1U6 + FR-CC2-H315K-60 (*2)	-	-	610	547	-	-	500	450	P+R	820.6				- (*3)
FR-A842-08660-E1U6 + FR-CC2-H315K-60 (*2)	-	-	-	610	-	-	-	500		820.6				- (*3)
FR-A842-07700-E1U6 + FR-CC2-H355K-60 (*2)	-	683	-	-	-	550	-	-		827.2				- (*3)
FR-A842-08660-E1U6 + FR-CC2-H355K-60 (*2)	-	-	683	-	-	-	550	-		827.2				- (*3)
FR-A842-09620-E1U6 + FR-CC2-H355K-60 (*2)	-	-	-	683	-	-	-	550	Q+R	1003.2				- (*3)
FR-A842-07700-E1U6 + FR-CC2-H400K-60 (*2)	770	-	-	-	650	-	-	-	P+S	979				- (*3)
FR-A842-08660-E1U6 + FR-CC2-H400K-60 (*2)	-	770	-	-	-	650	-	-		979				- (*3)
FR-A842-09620-E1U6 + FR-CC2-H400K-60 (*2)	-	-	770	-	-	-	650	-	Q+S	1155				- (*3)
FR-A842-10940-E1U6 + FR-CC2-H400K-60 (*2)	-	-	-	770	-	-	-	650		1155				- (*3)
FR-A842-08660-E1U6 + FR-CC2-H450K-60 (*2)	866	-	-	-	700	-	-	-	P+S	986				- (*3)
FR-A842-09620-E1U6 + FR-CC2-H450K-60 (*2)	-	866	-	-	-	700	-	-	Q+S	1162				- (*3)
FR-A842-10940-E1U6 + FR-CC2-H450K-60 (*2)	-	-	866	-	-	-	700	-		1162				- (*3)
FR-A842-12120-E1U6 + FR-CC2-H450K-60 (*2)	-	-	-	866	-	-	-	700		1162				- (*3)
FR-A842-09620-E1U6 + FR-CC2-H500K-60 (*2)	962	-	-	-	800	-	-	-		1168				- (*3)
FR-A842-10940-E1U6 + FR-CC2-H500K-60 (*2)	-	962	-	-	-	800	-	-		1168				- (*3)
FR-A842-12120-E1U6 + FR-CC2-H500K-60 (*2)	-	-	962	-	-	-	800	-		1168				- (*3)
FR-A842-10940-E1U6 + FR-CC2-H560K-60 (*2)	1094	-	-	-	900	-	-	-		1179				- (*3)
FR-A842-12120-E1U6 + FR-CC2-H560K-60 (*2)	-	1094	-	-	-	900	-	-		1179				- (*3)
FR-A842-12120-E1U6 + FR-CC2-H630K-60 (*2)	1212	-	-	-	1000	-	-	-		1181				- (*3)

Notes:
1. These drives must be used with DC Link Chokes (sold separately).
2. Drives are "sectional" design, used together with FR-CC2 rectifier stage.
3. Consult VFD Marketing for availability.
4. For FR-A842 and FR-CC2 combinations, the weights are COMBINED. Drives in shaded area MUST be used together with FR-HEL DC Link Choke (sold separately).

FR-A800-E Ratings 600V Class

Model Number (*4)	AMPS for Duty				Horsepower for Duty (NEC)				Frame Size	Weight (lbs)	Cooling Method	Protective Rating	Regen. Braking Torque / Duty (Using Standard Brake Resistors Where Supplied
	SLD	LD	ND	HD	SLD	LD	ND	HD					
FR-A860-00027-E1N6	2.7	2.5	1.7	1	2	1.5	1	0.5	C	11.7	Self-Cooling	Enclosed Type (UL-1 plenum rated) (*3)	20% Braking Torque 100% ED
FR-A860-00061-E1N6	6.1	5.6	4	2.7	5	3	3	2	C	12.8	Forced Air Cooling		
FR-A860-00090-E1N6	9	8.2	6.1	4	7.5	5	5	3	C	12.8			
FR-A860-00170-E1N6	17	16	12	9	15	10	10	7.5	D	15.4			
FR-A860-00320-E1N6	32	27	22	16	30	25	20	10	E	19.8			
FR-A860-00450-E1N6	45	41	33	24	40	40	30	20	F	37.4			
FR-A860-00680-E160	68	62	55	41	60	60	50	40	H	79.2		Open Type (IP00)	10% Braking Torque 100% ED (Use FR-BU2-C for higher rating)
FR-A860-01080-E160 (*1)	108	99	84	63	100	100	75	60	H	90.2			
FR-A860-01440-E160 (*1)	144	131	104	84	150	125	100	75	J	114			
FR-A860-01670-E160 (*1)	167	152	131	104	150	150	125	100	J	114			
FR-A860-02430-E160 (*1)	243	221	152	131	250	200	150	125	J	121			
FR-A860-02890-E160 (*1)	289	255	221	152	300	250	200	150	M	246			
FR-A860-03360-E160 (*1)	336	304	255	202	350	300	250	200	M	253			
FR-A860-04420-E160 (*1)	442	402	304	255	450	400	300	250	N	337			
FR-A862-05450-E160 + FR-CC2-C355K-60 (*2)	545	496	402	304	550	500	400	300	P+R	810			
FR-A862-06470-E160 + FR-CC2-C400K-60 (*2)	647	589	496	402	650	600	500	400	Q+S	920			
FR-A862-08500-E160 + FR-CC2-C560K-60 (*2)	850	773	663	589	850	750	650	600	Q+S	1126			

Notes:
1. These drives MUST be used with a DC Link Choke (sold separately). 2. FR-A862 Drives are inverter stage only; use together with FR-CC2-C rectifier stage. Maximum Input and Output Current of FR-CC2 modules is the value shown. COMBINED weight shown. 3. Remove the standard brake resistor (if fitted) for UL type 1. Rating is otherwise NEMA 1. 4. The FR-A860 does not include a built-in parameter unit. The FR-DU08 or FR-LU08 is sold separately.

690 VAC Power Input

Model Number			A870-02300-E1-60	A870-02860-E1-60
Stocked Item			-	-
Applicable Motor Capacity (kW) (*1)		SLD	200	250
		ND (Initial Setting)	160	200
Output	Rated Capacity (kVA) (*2)	SLD	275	342
		ND (Initial Setting)	221	275
	Rated Current (A (*3)	SLD	230	286
		ND (Initial Setting)	185	230
	Overload Current Rating	SLD	110% 60 s, 120% 3 s (inverse-time characteristics) at surrounding air temperature 40°C	
		ND (Initial Setting)	150% 60 s, 200% 3 s (inverse-time characteristics) at surrounding air temperature 40°C	
	Rated Voltage		Three-phase 600 to 690 V	
Power Supply	Rated input AC Voltage/Frequency		Three-phase 600 to 690 V 50 Hz/60 Hz	
	Permissible AC Voltage Fluctuation		540 to 759 V 50 Hz/60 Hz	
	Permissible Frequency Fluctuation		±5%	
	Rated Input Current (A)	SLD	230	286
		ND (Initial Setting)	185	230
	Power Supply Capacity (kVA)	SLD	275	342
		ND (Initial Setting)	221	275
Protective Structure (IEC 60529)			Enclosed type (IP20)	
Cooling System			Forced air cooling	
Noise Level (dB)			79	79
Approx. Weight (kg)			120	122

600 VAC Power Input

Model Number			A870-02300-E1-60	A870-02300-E1-60
Stocked Item			-	-
Applicable Motor Capacity (kW) (*1)		SLD	132	160
		ND (Initial Setting)	110	132
Output	Rated Capacity (kVA) (2)	SLD	229	285
		ND (Initial Setting)	184	229
	Rated Current (A (*3)	SLD	230	286
		ND (Initial Setting)	185	230
	Overload Current Rating	SLD	110% 60 s, 120% 3 s (inverse-time characteristics) at surrounding air temperature 40°C	
		ND (Initial Setting)	150% 60 s, 200% 3 s (inverse-time characteristics) at surrounding air temperature 40°C	
	Rated Voltage (*5)		Three-phase 525 to 600 V	
Power Supply	Rated input AC Voltage/Frequency		Three-phase 525 to 600 V 50 Hz/60 Hz	
	Permissible AC Voltage Fluctuation		472 to 660 V 50 Hz/60 Hz	
	Permissible Frequency Fluctuation		±5%	
	Rated Input Current (A)	SLD	230	286
		ND (Initial Setting)	185	230
	Power Supply Capacity (kVA)	SLD	229	285
		ND (Initial Setting)	184	229
Protective Structure (IEC 60529)			Enclosed type (IP20)	
Cooling System			Forced air cooling	
Noise Level (dB)			79	79
Approx. Weight (kg)			120	122

Notes: See User Manual for detailed information.
1. Indicates the maximum capacity applicable to voltage of 690 V. 2. The rated output capacity indicated assumes that the output voltage is 690 V. 3. Possible output currents during continuous operation under Real sensorless vector control or Vector control are shown in the table below. The PWM carrier frequency is automatically decreased to 2 kHz for heavy duty applications when operating the motor under Real sensorless vector control or Vector control with a PWM carrier frequency of 6 kHz or more (Pr.72 ≥ 6). The carrier frequency stays at 4 kHz in fast response operation.

FR-A800-E General Specifications

Operation Specifications	Control Method		Soft-PWM control, high carrier frequency PWM control (selectable among V/F control, Advanced magnetic flux vector control, Real sensorless vector control), Optimum excitation control, vector control (*1), and PM sensorless vector control
	Output Frequency Range		0.2 to 590 Hz (The upper-limit frequency is 400 Hz under Advanced magnetic flux vector control, Real sensorless vector control, vector control (*1) and PM sensorless vector control.)
	Frequency Setting Resolution	Analog Input	0.015 Hz/60 Hz (0 to 10 V/12 bits for terminals 2 and 4) 0.03 Hz/60 Hz (0 to 5 V/11 bits or 0 to 20 mA/approx. 11 bits for terminals 2 and 4, 0 to ±10 V/12 bits for terminal 1) 0.06 Hz/60 Hz (0 to ±5 V/11 bits for terminal 1)
		Digital Input	0.01 Hz
	Frequency Accuracy	Analog Input	Within ±0.2% of the max. output frequency (25°C ± 10°C)
		Digital Input	Within 0.01% of the set output frequency
	Voltage / Frequency Characteristics		Base frequency can be set from 0 to 590 Hz. Constant-torque/variable-torque pattern or adjustable 5 points V/F can be selected.
	Starting Torque (*2)		SLD Rating: 120% 0.3 Hz, LD Rating:150% 0.3 Hz, ND Rating: 200% 0.3 Hz (*3), HD Rating: 250% 0.3 Hz (*3) (Real sensorless vector control, vector control (*1))
	Torque Boost		Manual torque boost
	Acceleration / Deceleration Time Setting		0 to 3600 s (acceleration and deceleration can be set individually), linear or S-pattern acceleration/deceleration mode, backlash countermeasures acceleration/deceleration can be selected.
	DC Injection Brake (Induction Motor)		Operation frequency (0 to 120 Hz), operation time (0 to 10 s), operation voltage (0 to 30%) variable
	Stall Prevention Operation Level		Activation range of stall prevention operation (SLD rating: 0 to 120%, LD rating: 0 to 150%, ND rating: 0 to 220%, HD rating: 0 to 280%). Whether to use the stall prevention or not can be selected. (V/F control, Advanced magnetic flux vector control)
	Torque Limit Level		Torque limit value can be set (0 to 400% variable). (Real sensorless vector control, vector control (*1) PM sensorless vector control)
	Frequency Setting Signal	Analog Input	Terminals 2 and 4: 0 to 10 V, 0 to 5 V, 4 to 20 mA (0 to 20 mA) are available. Terminal 1: -10 to +10 V, -5 to +5 V are available.
		Digital Input	Input using the setting dial of the operation panel or parameter unit Four-digit BCD or 16-bit binary (when used with option FR-A8AX)
	Start Signal		Forward and reverse rotation or start signal automatic self-holding input (3-wire input) can be selected.
	Input Signals (Twelve Terminals)		Low-speed operation command, Middle-speed operation command, High-speed operation command, Second function selection, Terminal 4 input selection, Jog operation selection, Selection of automatic restart after instantaneous power failure, flying start, Output stop, Start self-holding selection, Forward rotation command, Reverse rotation command, Inverter reset. The input signal can be changed using Pr.178 to Pr.189 (Input terminal function selection).
	Pulse Train Input		100 kpps
	Operational Functions		Maximum and minimum frequency settings, multi-speed operation, acceleration/deceleration pattern, thermal protection, DC injection brake, starting frequency, JOG operation, output stop (MRS), stall prevention, regeneration avoidance, increased magnetic excitation deceleration, DC feeding (*4) , frequency jump, rotation display, automatic restart after instantaneous power failure, electronic bypass sequence, remote setting, automatic acceleration/deceleration, retry function, carrier frequency selection, fast-response current limit, forward/reverse rotation prevention, operation mode selection, slip compensation, droop control, load torque high-speed frequency control, speed smoothing control, traverse, auto tuning, applied motor selection, gain tuning, RS-485 communication, Ethernet communication, PID control, PID precharge function, easy dancer control, cooling fan operation selection, stop selection (deceleration stop/coasting), powerfailure deceleration stop function, stop-on-contact control, PLC function, life diagnosis, maintenance timer, current average monitor, multiple rating, orientation control (*1), speed control, torque control, position control, pre-excitation, torque limit, test run, 24 V power supply input for control circuit, safety stop function, anti-sway control.
	Output Signals Open Collector Output (Five Terminals) Relay Output (Two Terminals)		Inverter running, Up to frequency, Instantaneous power failure/undervoltage (*4), Overload warning, Output frequency detection, Fault The output signal can be changed using Pr.190 to Pr.196 (Output terminal function selection). Fault codes of the inverter can be output (4 bits) from the open collector.
	Pulse Train Output		50 kpps
Indication	Pulse Train Output (FM Type)		Max. 2.4 kHz: one terminal (output frequency) The monitored item can be changed using Pr.54 FM/CA terminal function selection.
	Current Output (CA Type)		Max. 20 mADC: one terminal (output frequency). The monitored item can be changed using Pr.54 FM/CA terminal function selection.
	Voltage Output		Max. 10 VDC: one terminal (output frequency). The monitored item can be changed using Pr.158 AM terminal function selection.
	Operation Panel (FR-DU08)	Operating Status	Output frequency, Output current, Output voltage, Frequency setting value. The monitored item can be changed using Pr.52 Operation panel main monitor selection.
		Fault Record	A fault record is displayed when a fault occurs. Past 8 fault records and the conditions immediately before the fault (output voltage/current/frequency/cumulative energization time/year/month/date/time) are saved.
Protective Functions			Overcurrent trip during acceleration, Overcurrent trip during constant speed, Overcurrent trip during deceleration or stop, Regenerative overvoltage trip during acceleration, Regenerative overvoltage trip during constant speed, Regenerative overvoltage trip during deceleration or stop, Inverter overload trip, Motor overload trip, Heatsink overheat, Instantaneous power failure (*4), Undervoltage (*4), Input phase loss (*4, *5), Stall prevention stop, Loss of synchronism detection (*5), Brake transistor alarm detection (*6), Output side earth (ground) fault overcurrent, Output short circuit, Output phase loss, External thermal relay operation (*5), PTC thermistor operation (*5), Option fault, Communication option fault, Parameter storage device fault, PU disconnection, Retry count excess (*5), CPU fault, Operation panel power supply short circuit, 24 VDC power fault, Abnormal output current detection (*5), Inrush current limit circuit fault (*4), Ethernet communication fault (*5), Analog input fault, USB communication fault, Safety circuit fault, Overspeed occurrence (*5), Speed deviation excess detection (*1, *5), Signal loss detection (*1, *5), Excessive position fault (*1, *5), Brake sequence fault (*5), Encoder phase fault (*1, *5), 4 mA input fault (*5), Pre-charge fault (*5), PID signal fault (*5), Option fault, Opposite rotation deceleration fault (*5), Internal circuit fault, Abnormal internal temperature (*7), Magnetic pole position unknown (*1)
Warning Functions			Fan alarm, Stall prevention (overcurrent), Stall prevention (overvoltage), Regenerative brake pre-alarm (*5, *6), Electronic thermal relay function pre-alarm, PU stop, Speed limit indication (*5), Parameter copy, Safety stop, Maintenance timer 1 to 3 (*5), USB host error, Home position return setting error (*5), Home position return uncompleted (*5), Home position return parameter setting error (*5), Operation panel lock (*5), Password locked (*5), Parameter write error, Copy operation error, 24 V external power supply operation, Internal fan alarm (*7), Continuous operation during communication fault, Ethernet communication fault
Environment	Ambient Temperature		-10°C to +50°C (non-freezing) (LD, ND, HD ratings) -10°C to +40°C (non-freezing) (SLD rating, IP55 compatible model)
	Ambient Humidity		95% RH or less (non-condensing) (With circuit board coating (conforming to IEC60721-3-3 3C2/3S2), IP55 compatible model) 90% RH or less (non-condensing) (Without circuit board coating)
	Storage Temperature (*8)		-20°C to +65°C (*2)
	Atmosphere		Indoors (without corrosive gas, flammable gas, oil mist, dust and dirt, etc.)
	Altitude / Vibration		1000 m or lower (*9), 5.9 m/s2 (*10) or less at 10 to 55 Hz (directions of X, Y, Z axes)

Notes:
1. Available only when a vector control compatible option is installed.
2. For PM sensorless vector control, refer to the Instruction Manual (Detailed) of the FR-A800 inverter.
3. In the initial setting of the FR-A820-00340(5.5K) or higher and the FR-A840-00170(5.5K) or higher, it is limited to 150% by the torque limit level.
4. Enabled only for standard models and IP55 compatible models.
5. This protective function is not available in the initial status.
6. Enabled only for standard models.
7. Available for the IP55 compatible model only.
8. Temperature applicable for a short time, e.g. in transit.
9. For the installation at an altitude above 1000 m (up to 2500 m), consider a 3% reduction in the rated current per altitude increase of 500 m.
10. 2.9 m/s² or less for the FR-A840-04320(160K) or higher.

FR-HEL DC Link Chokes (sold separately)

Model Number	SLD	LD	ND	HD
FR-A840-01800-E160	FR-HEL-H110K	FR-HEL-H75K	FR-HEL-H75K	FR-HEL-H55K
FR-A840-02160-E1U6	FR-HEL-H110K	FR-HEL-H90K	FR-HEL-H75K	FR-HEL-H75K
FR-A840-02600-E1U6	FR-HEL-H132K	FR-HEL-H110K	FR-HEL-H90K	FR-HEL-H90K
FR-A840-03250-E1U6	FR-HEL-H160K	FR-HEL-H132K	FR-HEL-H110K	FR-HEL-H110K
FR-A840-03610-E1U6	FR-HEL-H185K	FR-HEL-H160K	FR-HEL-H132K	FR-HEL-H132K
FR-A840-04320-E1U6	FR-HEL-H220K	FR-HEL-H185K	FR-HEL-H160K	FR-HEL-H160K
FR-A840-04810-E1U6	FR-HEL-H250K	FR-HEL-H220K	FR-HEL-H185K	FR-HEL-H185K
FR-A840-05470-E1U6	FR-HEL-H280K	FR-HEL-H250K	FR-HEL-H220K	FR-HEL-H220K
FR-A840-06100-E1U6	FR-HEL-H315K	FR-HEL-H280K	FR-HEL-H250K	FR-HEL-H250K
FR-A840-06830-E1U6	FR-HEL-H355K	FR-HEL-H315K	FR-HEL-H280K	FR-HEL-H280K

FR-HEL DC Link Chokes (sold separately)

Model Number	SLD	LD	ND	HD
FR-A860-01080-E160	FR-HEL-C75K	FR-HEL-C75K	-	-
FR-A860-01440-E160	FR-HEL-C90K	FR-HEL-C90K	FR-HEL-C75K	-
FR-A860-01670-E160	FR-HEL-C110K	FR-HEL-C110K	FR-HEL-C90K	FR-HEL-C75K
FR-A860-02430-E160	FR-HEL-C132K	FR-HEL-C132K	FR-HEL-C110K	FR-HEL-C90K
FR-A860-02890-E160	FR-HEL-C185K	FR-HEL-C185K	FR-HEL-C132K	FR-HEL-C110K
FR-A860-03360-E160	FR-HEL-C220K	FR-HEL-C220K	FR-HEL-C185K	FR-HEL-C185K
FR-A860-04420-E160	FR-HEL-C280K	FR-HEL-C280K	FR-HEL-C220K	FR-HEL-C185K

Key to Duty Code (FR-A820, FR-A840)

	Overload Rating		
	60s	**3s**	**Ambient Temp (°C)**
SLD	110%	120%	40
LD	120%	150%	50
ND	150%	200%	50
HD	200%	250%	50

Key to Duty Code (FR-A860)

	Overload Rating		Ambient Temperature by Frame Size (°C)		
	60s	**3s**	**C**	**D-H**	**J-Q**
SLD	110%	120%	30	40	40
LD	120%	150%	40	40	50
ND	150%	200%	40	40	50
HD	200%	250%	40	40	40

FR-A800-E Dimensions - Frame Size Key

	Height-in (mm)	Width-in (mm)	Depth-in (mm)
A	12.2 (310)	4.33 (110)	4.39 (112)
B	12.2 (310)	4.33 (110)	4.98 (127)
C	12.52 (318)	5.91 (150)	5.57 (142)
D	12.76 (324)	8.66 (220)	6.69 (170)
E	14.29 (363)	8.66 (220)	7.48 (190)
F	20.37(517)	9.84 (250)	7.48 (190)
G	21.67 (550)	12.80 (325)	7.68 (195)
H	21.67 (550)	17.13 (435)	9.84 (250)
J	24.41 (620)	18.31 (465)	11.81 (300)
K	27.56 (700)	18.31 (465)	9.84 (250)
L	29.13 (740)	18.31 (465)	14.17 (360)
M	39.76 (1010)	19.61 (498)	14.96 (380)
N	39.76 (1010)	26.77 (680)	14.96 (380)
P	52.4 (1330)	21.3 (540)	17.3 (440)
Q	62.2 (1580)	26.8 (680)	17.3 (440)
R	52.4 (1330)	23.6 (600)	17.3 (440)
S	62.2 (1580)	23.6 (600)	17.3 (440)

Dimensions of REQUIRED DC Link Chokes (sold separately)

Model Number	Height - inches (mm)	Width - inches (mm)	Depth - inches (mm)	Weight (lbs)
FR-HEL-75K	13.39 (340)	5.91 (150)	7.87 (200)	37
FR-HEL-90K	13.39 (340)	5.91 (150)	7.87 (200)	42
FR-HEL-110K	15.75 (400)	6.89 (175)	7.87 (200)	44
FR-HEL-H75K	12.60 (320)	5.51 (140)	7.28 (185)	35
FR-HEL-H90K	13.39 (340)	5.91 (150)	7.48 (190)	44
FR-HEL-H110K	13.39 (340)	5.91 (150)	7.68 (195)	48
FR-HEL-H132K	15.94 (405)	6.89 (175)	7.87 (200)	57
FR-HEL-H160K	15.94 (405)	6.89 (175)	8.07 (205)	62
FR-HEL-H185K	15.94 (405)	6.89 (175)	9.45 (240)	64
FR-HEL-H220K	15.94 (405)	6.89 (175)	9.45 (240)	66
FR-HEL-H250K	17.32 (440)	7.48 (190)	9.84 (250)	77
FR-HEL-H280K	17.32 (440)	7.48 (190)	10.04 (255)	84
FR-HEL-H315K	19.5 (495)	8.3 (210)	9.8 (250)	92
FR-HEL-H355K	19.5 (495)	8.3 (210)	9.8 (250)	101
FR-HEL-C75K	12.6 (320)	5.5 (140)	7.3 (185)	35
FR-HEL-C90K	13.3 (340)	5.9 (150)	9.4 (240)	44
FR-HEL-C110K	13.3 (340)	5.9 (150)	9.4 (240)	51
FR-HEL-C132K	15.9 (405)	6.9 (175)	7.7 (195)	53
FR-HEL-C185K	15.9 (405)	6.9 (175)	9.4 (240)	70
FR-HEL-C220K	15.9 (405)	6.9 (175)	9.4 (240)	73
FR-HEL-C280K	17.3 (440)	7.5 (190)	9.8 (250)	88

FR-A800-E Dynamic Braking

All Mitsubishi Electric VFDs have some inherent braking capability. During controlled deceleration, motor regenerative losses are dissipated in the motor, wire, and VFD circuitry. The built-in DC injection braking allows for low-speed braking and stopping. When the above capabilities are inadequate for an application, it is necessary to add a power transistor brake unit and resistor unit in series across the DC bus. Motor regeneration causes the DC bus voltage to increase, and when the voltage exceeds a specified threshold, the transistor turns on to pass current through the resistor. Motor kinetic energy is converted to heat energy. VFD overcurrent and overvoltage protective circuits are active at all times, and will fault-trip the VFD if the brake size is inadequate.

Two main factors must be considered when sizing the brake, the effective duty cycle (%ED) and the short time duty rating. The effective duty cycle is increased when an external resistor is added. It is preferable to profile the effective duty cycle of the units of time. With this information, the short time duty is known and the %ED can be calculated, as shown in the following example. %ED = Braking time / total time for complete operating cycle x 100
Example: In a given application a load is accelerated for 5 seconds, runs for 60 seconds and decelerates in 3 seconds before resting for 12 seconds.
%ED = 3 / (5 + 60 + 3 + 12) x 100 = 3.6%
The tables shown assume 100% brake torque, when brake torque is represented by its percentage to the rated torque of the applied motor.
Torque (kg.m) = 974 x Power (kW) / Speed (rpm).

FR-A800-E Fitted with Internal Brake Resistor – Torque and Duty Cycle Figure

ND Mode HP	Drive Model Number	Internal Resistor			High Performance Brake Resistor Option			
		Brake Resistor Value (ohms)	Torque %	Duty % (ED%)	Part Ref.	Ohms	Torque %	Duty % (ED%)
3/4	**FR-A820-00046-E1N6**	200	150	3	FR-ABR-0.4K	200	150	10
1	**FR-A820-00077-E1N6**	100	150	3	FR-ABR-0.75K	100	150	10
2	**FR-A820-00105-E1N6**	60	150	3	FR-ABR-2.2K	60	100	10
3	**FR-A820-00167-E1N6**	60	100	3	FR-ABR-2.2K	60	100	10
5	**FR-A820-00250-E1N6**	40	100	3	FR-ABR-3.7K	40	100	10
7.5	**FR-A820-00340-E1N6**	25	100	2	FR-ABR-5.5K	25	100	10
10	**FR-A820-00490-E1N6**	20	100	2	FR-ABR-7.5K	20	100	10
15	**FR-A820-00630-E1N6**	-	-	-	FR-ABR-11K	13	100	6
20	**FR-A820-00770-E1N6**	-	-	-	(2x) FR-ABR-15K[2P]	9	100	6
25	**FR-A820-00930-E1N6**	-	-	-	(2x) FR-ABR-22K[2P]	6.5	100	6
30	**FR-A820-01250-E1N6**	-	-	-	(2x) FR-ABR-22K[2P]	6.5	100	6
1/2	**FR-A840-00023-E1N6**	1200	100	2	FR-ABR-H0.4K	1200	100	10
1	**FR-A840-00038-E1N6**	700	100	2	FR-ABR-H0.75K	700	100	10
2	**FR-A840-00052-E1N6**	350	100	2	FR-ABR-H1.5K	350	100	10
3	**FR-A840-00083-E1N6**	250	100	2	FR-ABR-H2.2K	250	100	10
5	**FR-A840-00126-E1N6**	150	100	2	FR-ABR-H3.7K	150	100	10
7.5	**FR-A840-00170-E1N6**	75	100	2	FR-ABR-H5.5K	110	100	10
10	**FR-A840-00250-E1N6**	75	100	2	FR-ABR-H7.5K	75	100	10
15	**FR-A840-00310-E1N6**	-	-	-	FR-ABR-H11K	52	100	6
20	**FR-A840-00380-E1N6**	-	-	-	(2x) FR-ABR-H15K[2S]	36 (72)	100	6
25	**FR-A840-00470-E1N6**	-	-	-	(2x) FR-ABR-H15K[2S]	36 (72)	100	6
30	**FR-A840-00620-E1N6**	-	-	-	(2x) FR-ABR-H22K[2S]	26 (52)	100	6
40	**FR-A840-00770-E160**	-	-	-	(2x) FR-ABR-H22K[2S]	26 (52)	100	6
50	**FR-A840-00930-E160**	-	-	-	3RD PARTY RESISTOR *	13.5	115	*
60	**FR-A840-01160-E160**	-	-	-	3RD PARTY RESISTOR *	13.5	95	*
75	**FR-A840-01800-E160**	-	-	-	3RD PARTY RESISTOR *	13.5	77	*
1	**FR-A860-00027-E1N6**	-	-	-	3RD PARTY RESISTOR *	1000	118	*
3	**FR-A860-00061-E1N6**	-	-	-	3RD PARTY RESISTOR *	370	108	*
5	**FR-A860-00090-E1N6**	-	-	-	3RD PARTY RESISTOR *	220	108	*
10	**FR-A860-00170-E1N6**	-	-	-	3RD PARTY RESISTOR *	110	107	*
20	**FR-A860-00320-E1N6**	-	-	-	3RD PARTY RESISTOR *	60	98	*
30	**FR-A860-00450-E1N6**	-	-	-	3RD PARTY RESISTOR *	40	100	*
50	**FR-A860-00680-E160**	-	-	-	3RD PARTY RESISTOR *	24	99	*
75	**FR-A860-01080-E160**	-	-	-	3RD PARTY RESISTOR *	16	100	*

*Resistor wattage must be selected based on %ED (up to 100%)

FR-A800-E Terminal Connection Diagram

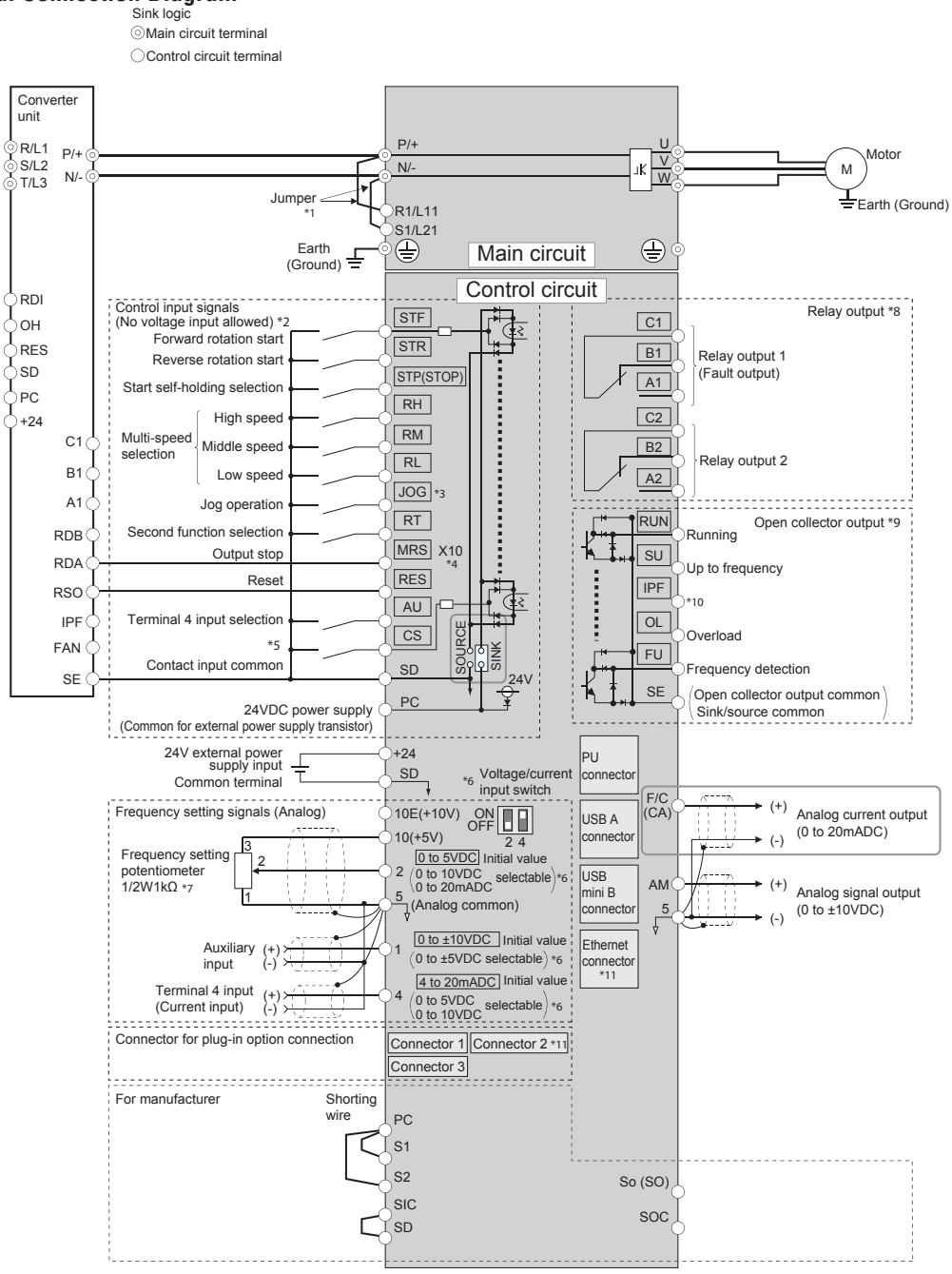

Notes:

1. For the FR-A820-03800(75K) or higher, the FR-A840-02160(75K) or higher, and when a 75 kW or higher motor is used, always connect a DC reactor (FR-HEL), which is available as an option. (To select a DC reactor, refer to page 26, and select one according to the applicable motor capacity.) When a DC reactor is connected to the FR-A820-03160(55K) or lower or the FR-A840-01800(55K) or lower, if a jumper is installed across terminals P1 and P/+, remove the jumper before installing the DC reactor.
2. When using a separate power supply for the control circuit, remove the jumper between R1/L11 and S1/L21.
3. The function of these terminals can be changed with the input terminal assignment (Pr.178 to Pr.189).
4. Terminal JOG is also used as the pulse train input terminal. Use Pr.291 to choose JOG or pulse.
5. Terminal input specifications can be changed by analog input specification switchover (Pr.73, Pr.267). To input a voltage, set the voltage/current input switch OFF. To input a current, set the voltage/current input switch ON. Terminals 10 and 2 are also used as a PTC input terminal. (Pr.561) (Refer to the FR-A800 Instruction Manual (Detailed).)
6. It is recommended to use 2 W 1 kΩ when the frequency setting signal is changed frequently.
7. If connecting a brake resistor, remove the jumper between PR and PX (FR-A820-00046(0.4K) to 00490(7.5K), FR-A840-00023(0.4K) to 00250(7.5K)).
8. Connect a brake resistor across terminals P/+ (P3) and PR. (Terminal PR is equipped in FR-A820-00046(0.4K) to 01250(22K), FR-A840-00023(0.4K) to 01800(55K).) Install a thermal relay to prevent overheating and damage of discharging resistors. (Refer to the FR-A800 Instruction Manual (Detailed).)
9. Do not connect the DC power supply (under DC feeding mode) to terminal P3.
10. The function of these terminals can be changed with the output terminal assignment (Pr.195, Pr.196).
11. The function of these terminals can be changed with the output terminal assignment (Pr.190 to Pr.194).
12. Terminal F/C (FM) can be used to output pulse trains as open collector output by setting Pr.291.
13. Not required when calibrating the scale with the operation panel.
14. The option connector 2 cannot be used because the Ethernet board is installed in the initial status. The Ethernet board must be removed to install a plug-in option to the option connector 2. (However, Ethernet communication is disabled in that case.)

ADDITIONAL NOTES

- To prevent a malfunction due to noise, keep the signal cables 10 cm or more away from the power cables. Also, separate the main circuit cables at the input side from the main circuit cables at the output side.
- After wiring, wire offcuts must not be left in the inverter. Wire offcuts can cause an alarm, failure or malfunction. Always keep the inverter clean. When drilling mounting holes in an enclosure etc., take caution not to allow chips and other foreign matter to enter the inverter.
- Set the voltage/current input switch correctly. Incorrect setting may cause a fault, failure or malfunction.

FR-A802 Terminal Connection Diagram

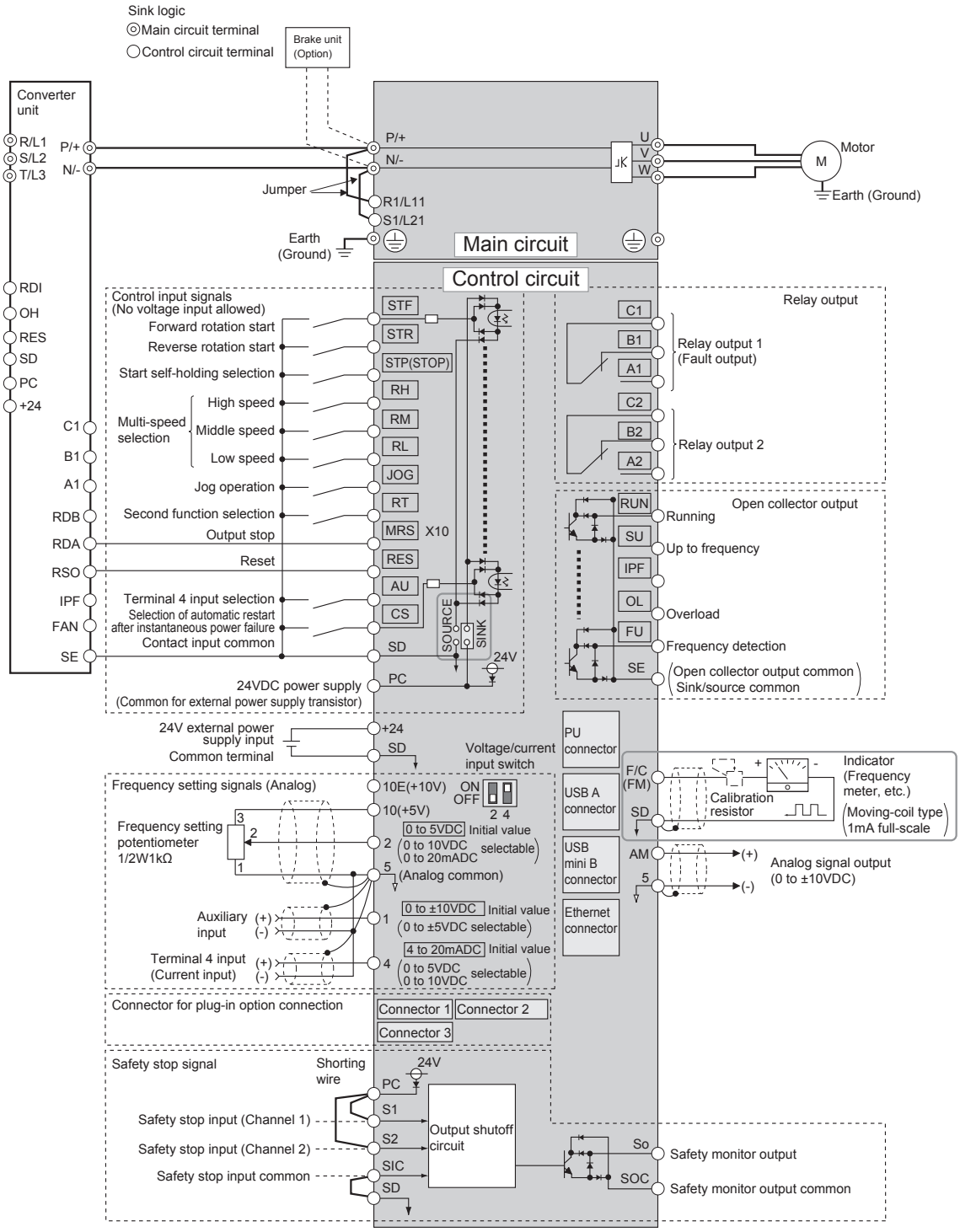

Notes:

1. Terminals R1/L11 and S1/L21 are connected to terminals P/+ and N/- with a jumper respectively. When using a separate power supply for the control circuit, remove the jumpers from R1/L11 and S1/L21.
2. The function of these terminals can be changed with the input terminal assignment (Pr.178 to Pr.189).
3. Terminal JOG is also used as the pulse train input terminal. Use Pr.291 to choose JOG or pulse.
4. The X10 signal (NC contact input specification) is assigned to terminal MRS in the initial setting. Set Pr.599 = "0" to change the input specification of the X10 signal to NO contact.
5. Terminal input specifications can be changed by analog input specification switchover (Pr.73, Pr.267). To input a voltage (0 to 5 V/0 to 10 V), set the voltage/current input switch OFF. To input a current (4 to 20 mA), set the voltage/current input switch ON. Terminals 10 and 2 are also used as a PTC input terminal. (Pr.561)
6. It is recommended to use 2 W 1 kΩ when the frequency setting signal is changed frequently.
7. The function of these terminals can be changed with the output terminal assignment (Pr.195, Pr.196).
8. The function of these terminals can be changed with the output terminal assignment (Pr.190 to Pr.194).
9. No function is assigned in the initial setting. Use Pr.192 for function assignment.
10. Terminal FM can be used to output pulse trains as open collector output by setting Pr.291.
11. Not required when calibrating the scale with the operation panel.
12. The option connector 2 cannot be used because the Ethernet board is installed in the initial status. The Ethernet board must be removed to install a plug-in option to the option connector 2. (However, Ethernet communication is disabled in that case.)

ADDITIONAL NOTES

- To prevent a malfunction due to noise, keep the signal cables 10 cm or more away from the power cables. Also, separate the main circuit cables at the input side from the main circuit cables at the output side.
- After wiring, wire offcuts must not be left in the inverter. Wire offcuts can cause an alarm, failure or malfunction. Always keep the inverter clean. When drilling mounting holes in an enclosure etc., take caution not to allow chips and other foreign matter to enter the inverter.
- Set the voltage/current input switch correctly. Incorrect setting may cause a fault, failure or malfunction.

FR-CC2-H, FR-CC2-C Diode Converter Stage Terminal Connection Diagram

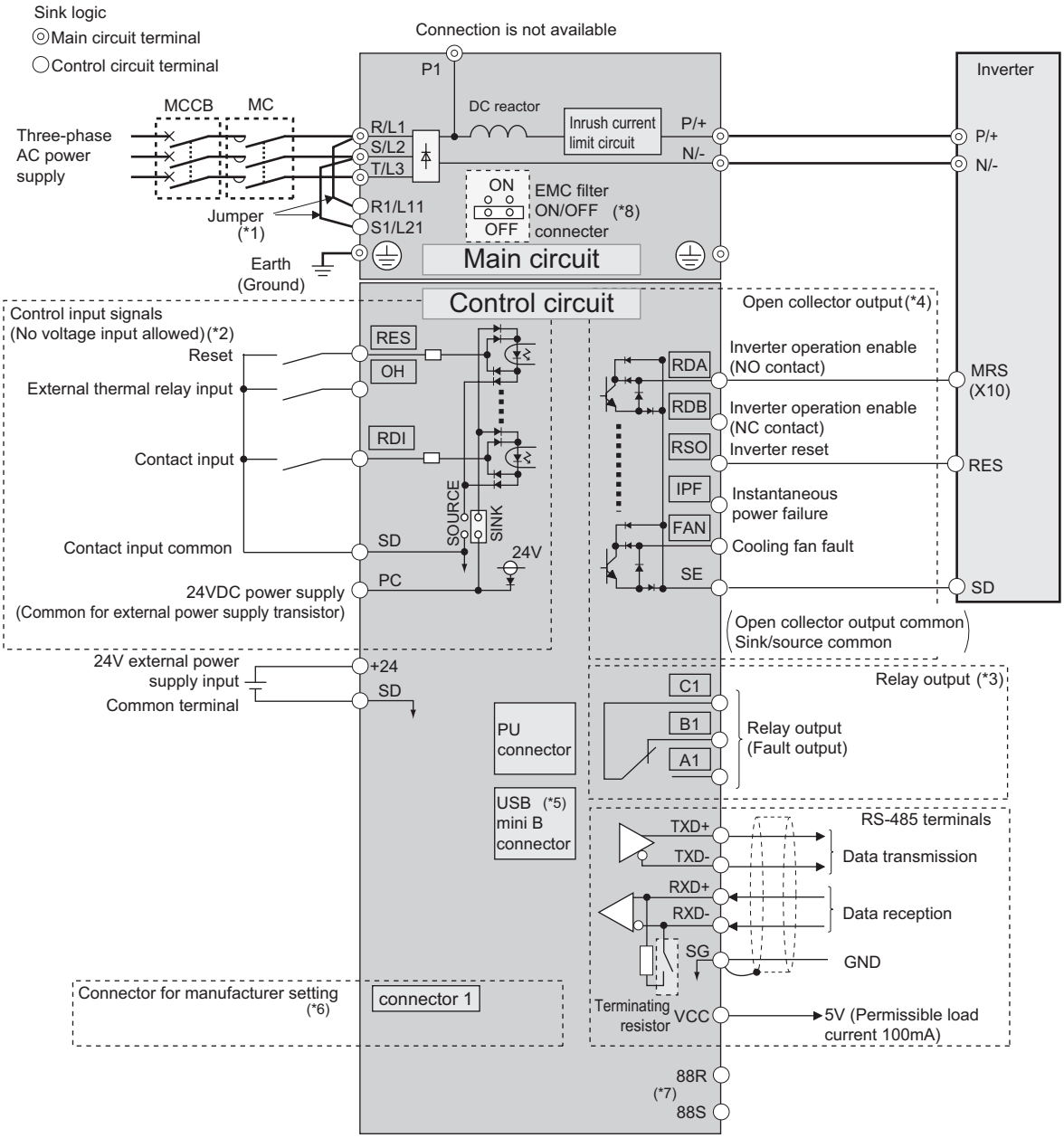

Notes:
1. When using a separate power supply for the control circuit, remove the jumpers from R1/L11 and S1/L21.
2. The function of these terminals can be changed with the input terminal assignment (Pr.178, Pr.187, Pr.189).
3. The function of these terminals can be changed with the output terminal assignment (Pr.195).
4. The function of these terminals can be changed with the output terminal assignment (Pr.190 to Pr.194).
5. The connector is for manufacturer setting. Do not use.
6. Plug-in options cannot be used.
7. For manufacturer setting. Do not use.
8. For the FR-CC2-H400K or higher, two EMC filter ON/OFF connectors are provided.

Dynamic Braking Options

- Select the brake unit according to the motor capacity.
- To obtain braking torque greater than 200%, use a larger inverter capacity.
- Up to 10 FR-BU2 brake units can be connected in parallel for increased braking capacity.

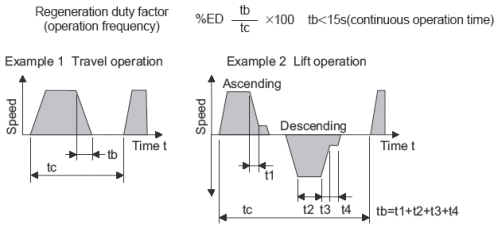

%ED or Time at Short-Time Rating When Braking Torque is 100%

Brake Unit Model Number		Stocked Item	Brake Resistor Model Number	Stocked Item	Motor Capacity (HP)													
					1	2	3	5	7.5	10	15	20	25	30	40	50	60	75
230V	FR-BU2-1.5K	S	BU-1500-TEIKOUKI	-	30 s	-	-	-	-	-	-	-	-	-	-	-	-	-
	FR-BU2-3.7K	S	BU-3700-TEIKOUKI	-	-	30 s	-	-	-	-	-	-	-	-	-	-	-	-
	FR-BU2-7.5K	S	BU-7.5K-TEIKOUKI	-	-	-	30 s	30 s	-	-	-	-	-	-	-	-	-	-
	FR-BU2-15K	S	FR-BR-15K-UL	S	-	-	-	-	80%	40%	15%	10%	-	-	-	-	-	-
	FR-BU2-30K	S	FR-BR-30K-UL	S	-	-	-	-	-	-	65%	30%	25%	15%	10%	-	-	-
	FR-BU2-55K	-	FR-BR-55K-UL	-	-	-	-	-	-	-	-	-	90%	60%	30%	20%	15%	10%
460V	FR-BU2-H7.5K	S	2 x BU-3700-TEIKOUKI	-	-	-	30 s	30 s	-	-	-	-	-	-	-	-	-	-
	FR-BU2-H15K	S	FR-BR-H15K-UL	S	-	-	-	-	80%	40%	15%	10%	-	-	-	-	-	-
	FR-BU2-H30K	S	FR-BR-H30K-UL	S	-	-	-	-	-	-	65%	30%	25%	15%	10%	-	-	-
	FR-BU2-H55K	S	FR-BR-H55K-UL	S	-	-	-	-	-	-	-	-	90%	60%	30%	20%	15%	10%
600V	FR-BU2-C22K	S	FR-BR-C3.7K	-	-	-	30%	10%	-	-	-	-	-	-	-	-	-	-
			FR-BR-C7.5K	-	-	-	-	40%	20%	10%	-	-	-	-	-	-	-	-
			FR-BR-C22K	-	-	-	-	-	-	85%	40%	20%	15%	10%	-	-	-	-
	2 x FR-BU2-C22K	S	2 x FR-BR-C22K	-	-	-	-	-	-	-	-	-	-	-	-	15%	-	-
	3 x FR-BU2-C22K	S	3 x FR-BR-C22K	-	-	-	-	-	-	-	-	-	-	-	-	-	-	15%

Brake Unit Model Number		Stocked Item	Brake Resistor Model Number	Stocked Item	Motor Capacity (HP)													
					100	125	150	200	250	300	350	400	450	500	600	700	800	
460V	FR-BU2-H75K	S	MT-BR5-H75K	-	10%	5%	-	-	-	-	-	-	-	-	-	-	-	
	2 x FR-BU2-H75K	S	2 x MT-BR5-H75K	-	40%	25%	15%	10%	5%	-	-	-	-	-	-	-	-	
	3 x FR-BU2-H75K	S	3 x MT-BR5-H75K	-	90%	60%	40%	20%	14%	10%	5%	5%	-	-	-	-	-	
	4 x FR-BU2-H75K	S	4 x MT-BR5-H75K	-	-	95%	70%	40%	25%	15%	13%	10%	5%	5%	-	-	-	
	5 x FR-BU2-H75K	S	5 x MT-BR5-H75K	-	-	-	-	60%	40%	25%	20%	15%	12%	10%	5%	5%	-	
	6 x FR-BU2-H75K	S	6 x MT-BR5-H75K	-	-	-	-	90%	55%	40%	25%	25%	15%	14%	10%	5%	5%	
	7 x FR-BU2-H75K	S	7 x MT-BR5-H75K	-	-	-	-	-	80%	55%	40%	35%	20%	15%	13%	10%	5%	
	8 x FR-BU2-H75K	S	8 x MT-BR5-H75K	-	-	-	-	-	-	70%	50%	45%	30%	25%	15%	13%	10%	

Braking Torque (%) at Short-Time Rating of 30 Sec. for 5HP and Less
Braking Torque (%) at Short-Time Rating of 15 Sec. for 7.5HP and Larger

Brake Unit Model Number		Stocked Item	Brake Resistor Model Number	Stocked Item	Motor Capacity (HP)													
					1	2	3	5	7.5	10	15	20	25	30	40	50	60	75
230V	FR-BU2-1.5K	S	BU-1500-TEIKOUKI	-	100%	50%	-	-	-	-	-	-	-	-	-	-	-	-
	FR-BU2-3.7K	S	BU-3700-TEIKOUKI	-	-	100%	50%	50%	-	-	-	-	-	-	-	-	-	-
	FR-BU2-7.5K	S	BU-7.5K-TEIKOUKI	-	-	-	100%	100%	-	-	-	-	-	-	-	-	-	-
	FR-BU2-15K	S	FR-BR-15K-UL	S	-	-	-	-	280%	200%	120%	100%	80%	70%	-	-	-	-
	FR-BU2-30K	S	FR-BR-30K-UL	S	-	-	-	-	-	-	260%	180%	160%	130%	100%	80%	70%	-
	FR-BU2-55K	-	FR-BR-55K-UL	-	-	-	-	-	-	-	-	-	300%	250%	180%	150%	120%	100%
460V	FR-BU2-H15K	S	FR-BR-H15K-UL	S	-	-	-	-	280%	200%	120%	100%	80%	70%	-	-	-	-
	FR-BU2-H30K	S	FR-BR-H30K-UL	S	-	-	-	-	-	-	260%	180%	160%	130%	100%	80%	70%	-
	FR-BU2-H55K	S	FR-BR-H55K-UL	S	-	-	-	-	-	-	-	-	300%	250%	180%	150%	120%	100%
600V	FR-BU2-C22K	S	FR-BR-C3.7K	-	-	-	170%	100%	-	-	-	-	-	-	-	-	-	-
			FR-BR-C7.5K	-	-	-	340%	200%	130%	100%	-	-	-	-	-	-	-	-
			FR-BR-C22K	-	-	-	-	-	-	300%	200%	145%	120%	100%	-	-	-	-
	2 x FR-BU2-C22K	S	2 x FR-BR-C22K	-	-	-	-	-	-	-	-	-	-	-	-	120%	-	-
	3 x FR-BU2-C22K	S	3 x FR-BR-C22K	-	-	-	-	-	-	-	-	-	-	-	-	-	-	120%

Note: FR-BU2-C22K is not UL or cUL listed for use with the FR-BR-C resistor. If UL or cUL is required, use the ASC-RES-C22K in place of FR-BR-C22K.

Brake Unit Model Number		Stocked Item	Brake Resistor Model Number	Stocked Item	Motor Capacity (HP)													
					100	125	150	200	250	300	350	400	450	500	600	700	800	
460V	FR-BU2-H75K	S	MT-BR5-H75K	-	100%	80%	65%	50%	40%	30%	28%	26%	22%	20%	-	-	-	
	2 x FR-BU2-H75K	-	2 x MT-BR5-H75K	-	200%	165%	135%	100%	80%	65%	55%	53%	44%	40%	33%	28%	25%	
	3 x FR-BU2-H75K	-	3 x MT-BR5-H75K	-	300%	250%	200%	150%	120%	100%	85%	80%	65%	60%	50%	43%	37%	
	4 x FR-BU2-H75K	-	4 x MT-BR5-H75K	-	-	300%	270%	200%	160%	135%	115%	105%	85%	80%	65%	55%	50%	
	5 x FR-BU2-H75K	-	5 x MT-BR5-H75K	-	-	-	300%	250%	200%	170%	140%	130%	110%	100%	83%	70%	62%	
	6 x FR-BU2-H75K	-	6 x MT-BR5-H75K	-	-	-	-	300%	240%	200%	170%	160%	130%	120%	100%	85%	75%	
	7 x FR-BU2-H75K	-	7 x MT-BR5-H75K	-	-	-	-	-	280%	235%	200%	185%	155%	140%	115%	100%	85%	
	8 x FR-BU2-H75K	-	8 x MT-BR5-H75K	-	-	-	-	-	-	270%	230%	210%	175%	160%	130%	110%	100%	

Dynamic Braking Unit & Resistor Specifications

Brake Unit Model Number		Stocked Item	Brake Resistor Model Number	Stocked Item	Weight - kg (lbs)	Resistance (Ohms)	Rated (Watts)	Continuous Permissible Power (Watts)
230V	FR-BU2-1.5K	S	BU-1500-TEIKOUKI	-	n/a	50	300	100
	FR-BU2-3.7K	S	BU-3700-TEIKOUKI	-	n/a	30	900	300
	FR-BU2-7.5K	S	BU-7.5K-TEIKOUKI	-	n/a	20	1800	600
	FR-BU2-15K	S	FR-BR-15K-UL	S	15 (33)	8	4000	990
	FR-BU2-30K	S	FR-BR-30K-UL	S	30 (66)	4	8000	1990
	FR-BU2-55K	-	FR-BR-55K-UL	-	70 (154)	2	16000	3910
460V	FR-BU2-H7.5K	S	2 x BU-3700-TEIKOUKI	-	n/a	60	1800	600
	FR-BU2-H15K	S	FR-BR-H15K-UL	S	15 (33)	32	4000	990
	FR-BU2-H30K	S	FR-BR-H30K-UL	S	30 (66)	16	8000	1990
	FR-BU2-H55K	S	FR-BR-H55K-UL	S	70 (154)	8	16000	3910
	FR-BU2-H75K	S	MT-BR5-H75K	-	70 (154)	6.5	30000	7500

FR-A800-E Dynamic Braking Units and Resistors - UFS Series

Not UL listed. For non-UL applications only.

- A more economical solution to regenerative braking applications.
- Internal Form-C relay
- Adjustable DC bus brake turn-on voltage
- Configurable master / slave brake configuration. Allows connection of up to 5 brake units (1 master / 4 slaves)

240V Series

		Motor Capacity									
Braking Torque	Hp	7.5	10	15	20	25	30	40	50	60	75
	kW	5.5	7.5	11	15	18.5	22	30	37	45	55
100% for 15 Secs.	Brake Unit	UFS22J					UFS40J		2 x UFS40J		
	Brake Resistor	RUFC15J			RUFC22J		RUFC40J		2 x RUFC40J		
Electrical Data	Continuous Permissible Power (W)	UFS22J - 1500W					UFS40J - 2000W		2ea x UFS40J - 4000W		
	Resistance (Overall)	RUFC15J - 24ohms			RUFC22J - 12ohms		RUFC40J - 7.5ohms		2ea x RUFC40J - 3.75ohms		
	Continuous Current (Amps)	7A			10A		14.6A		29.2A		

460V Series

		Motor Capacity								
Braking Torque	Hp	7.5	10	15	25	30	40	50	60	75
	kW	5.5	7.5	11	18.5	22	30	37	45	55
100% for 15 Secs.	Brake Unit	UFS22						UFS40		
	Brake Resistor	RUFC15/480		RUFC22/480				RUFC40/480		
Electrical Data	Continuous Permissible Power (W)	UFS22 - 2000W						UFS40 - 4000W		
	Resistance (Overall)	RUFC15/480 - 44ohms		RUFC22/480 - 27ohms				RUFC40/480 - 15ohms		
	Continuous Current (Amps)	6A		7.7A				14.6A		

		Motor Capacity						
Braking Torque	Hp	100	125	150	175	215	300	375
	kW	75	90	110	132	160	220	280
100% for 15 secs.	Brake Unit	UFS110				2 X UFS110		
	Brake Resistor	RUFC110/480				2 X RUFC110/480		
Electrical Data	Continuous Permissible Power (W)	UFS110 - 8000W				2 x UFS110 - 16000W		
	Resistance (Overall)	RUFC110/480 - 6.8ohms				2 x RUFC110/480 (1 per unit)		
	Continuous Current (Amps)	30.7A				61.4A		

Dimensions

Model Number		Height		Width		Depth		Approximate Weight		Stocked Item
		mm	inches	mm	inches	mm	inches	kg	lbs	
240V	UFS20J	250	9.8	100	3.9	175	6.9	2.5	5.5	S
	UFS40J									S
	RUFC15J	240	9.5			75	3	2.8	6.2	S
	RUFC22J	310	12.2					3.5	7.7	S
	RUFC40J	365	14.4					4.3	9.5	S
480V	UFS22	250	9.8	100	3.9	175	6.9	2.5	5.5	S
	UFS40									S
	UFS110			107	4.2	195	7.7	3.9	8.6	S
	RUFC15/480	310	12.2	100	3.9	75	3	3.5	7.7	S
	RUFC22/480	365	14.4					4.2	9.3	S
	RUFC40/480	2 x 365	2 x 14.4	2 x 100	2 x 3.9	2 x 75	2 x 3	8.7	19.2	S
	RUFC110/480	4 x 365	4 x 14.4	4 x 100	4 x 3.9	4 x 75	4 x 3	17.3	38.1	S

FR-A800 UL and Non-UL Listed DB Resistor Specifications

UL-Listed Resistors

Model Number	Input Voltage (VAC)	Normal Duty (HP) VT	Braking Torque	Rated Resistor Ohms	10% Braking	Encl.	Watts	25% Braking	Encl.	Watts
FR-A820-00046	230	1	100%	150.0	M150R250W-UL	CU-EN01	250	M150R250W-UL	CU-EN01	250
FR-A820-00077	230	2	100%	121.0	M121R250W-UL	CU-EN01	250	M121R250W-UL	CU-EN01	250
FR-A820-00105	230	3	100%	67.0	M67R250W-UL	CU-EN01	250	M67R500W-UL	CU-EN01	500
FR-A820-00167	230	5	100%	40.0	M40R250W-UL	CU-EN01	250	M40R506W-UL	CU-EN01	506
FR-A820-00250	230	7.5	100%	36.0	M36R500W-UL	CU-EN01	500	M36R851W-UL	CU-EN02	851
FR-A820-00340	230	10	100%	24.0	M24R506W-UL	CU-EN01	506	M24R1K27-UL	CU-EN02	1270
FR-A820-00490	230	15	100%	19.8	M19F8R690W-UL	CU-EN01	690	M19F8R2K00-UL	CU-EN04	2000
FR-A820-00630	230	20	100%	14.0	M14R1K50-UL	CU-EN04	1050	M14R2K53-UL	CU-EN06	2530
FR-A820-00770	230	25	100%	10.0	M10R1K38-UL	CU-EN04	1380	M10R3K45-UL	CU-EN04	3450
FR-A820-00930	230	30	100%	7.0	M7FR1K70-UL	CU-EN04	1700	M7FR4K26-UL	CU-EN06	4260
FR-A820-01250	230	40	100%	7.0	M7FR2K02-UL	CU-EN04	2020	M7FR5K06-UL	CU-EN06	5060
FR-A840-00023	460	1	100%	410.0	M410R750W-UL	CU-EN02	750	M410R750W-UL	CU-EN02	750
FR-A840-00038	460	2	100%	400.0	M400R750W-UL	CU-EN02	750	M400R750W-UL	CU-EN02	750
FR-A840-00052	460	3	100%	250.0	M250R500W-UL	CU-EN01	500	M250R500W-UL	CU-EN01	500
FR-A840-00083	460	5	100%	150.0	M150R250W-UL	CU-EN01	250	M150R506W-UL	CU-EN02	506
FR-A840-00126	460	7.5	100%	107.0	M107R500W-UL	CU-EN01	500	M107R1K00-UL	CU-EN02	1000
FR-A840-00170	460	10	100%	75.0	M75R506W-UL	CU-EN01	506	M75R1K27-UL	CU-EN02	1270
FR-A840-00250	460	15	100%	55.0	M55R1K00-UL	CU-EN02	1000	M55R2K00-UL	CU-EN04	2000
FR-A840-00310	460	20	100%	39.0	M39R1K01-UL	CU-EN02	1010	M39R2K53-UL	CU-EN04	2530
FR-A840-00380	460	25	100%	39.0	M39R1K38-UL	CU-EN02	1380	M39R3K45-UL	CU-EN06	3450
FR-A840-00470	460	30	100%	30.0	M30R1K70-UL	CU-EN03	1700	M30R4K26-UL	CU-EN06	4260
FR-A840-00620	460	40	100%	24.0	M24R2K02-UL	CU-EN04	2020	M24R5K06-UL	U-EN-DO09-1L	5060
FR-A840-00770	460	50	100%	17.0	M17R2K76-UL	CU-EN04	2760	M17R6K90-UL	U-EN-DO18-1L	6900
FR-A840-00930	460	60	100%	14.0	M14R3K40-UL	CU-EN06	3400	M14R8K51-UL	U-EN-DO18-1L	8510
FR-A840-01160	460	75	100%	13.7	M13F7R4K14-UL	CU-EN06	4140	M13F7R10K4-UL	U-EN-DO27-1H	10400
FR-A840-01800	460	100	80%	13.5	M13F5R5K06-UL	CU-EN06	5060	M13F5R12K7-UL	U-EN-DO27-1H	12700

UL-Listed Resistors cont'd

Model Number	33% Braking	Encl.	Watts	50% Braking	Encl.	Watts
FR-A820-00046	M150R250W-UL	CU-EN01	250	M150R250W-UL	CU-EN01	250
FR-A820-00077	M121R250W-UL	CU-EN01	250	M121R500W-UL	CU-EN01	500
FR-A820-00105	M67R500W-UL	CU-EN01	500	M67R750W-UL	CU-EN02	750
FR-A820-00167	M40R750W-UL	CU-EN02	750	M40R1K01-UL	CU-EN02	1010
FR-A820-00250	M36R1K12-UL	CU-EN02	1120	M36R1K70-UL	CU-EN03	1700
FR-A820-00340	M24R1K67-UL	CU-EN03	1670	M24R2K53-UL	CU-EN04	2530
FR-A820-00490	M19F8R2K28-UL	CU-EN04	2280	M19F8R3K45-UL	CU-EN06	3450
FR-A820-00630	M14R3K34-UL	CU-EN06	3340	M14R5K06-UL	CU-EN06	5060
FR-A820-00770	M10R4K55-UL	U-EN-DO09-1L	4550	M10R6K90-UL	U-EN-DO18-1L	6900
FR-A820-00930	M7FR5K62-UL	U-EN-DO09-1L	5620	M7FR8K51-UL	U-EN-DO18-1L	8510
FR-A820-01250	M7FR6K68-UL	U-EN-DO18-1L	6680	M7FR10K1-UL	U-EN-DO27-1H	10100
FR-A840-00023	M410R750W-UL	CU-EN02	750	M410R750W-UL	CU-EN02	750
FR-A840-00038	M400R750W-UL	CU-EN02	750	M400R750W-UL	CU-EN02	750
FR-A840-00052	M250R500W-UL	CU-EN01	500	M250R750W-UL	CU-EN02	750
FR-A840-00083	M150R750W-UL	CU-EN02	750	M150R1K01-UL	CU-EN02	1010
FR-A840-00126	M107R1K12-UL	CU-EN02	1120	M107R1K70-UL	CU-EN03	1700
FR-A840-00170	M75R1K67-UL	CU-EN02	1670	M75R2K53-UL	CU-EN04	2530
FR-A840-00250	M55R2K28-UL	CU-EN03	2280	M55R3K45-UL	CU-EN06	3450
FR-A840-00310	M39R3K34-UL	CU-EN04	3340	M39R5K06-UL	U-EN-DO09-1L	5060
FR-A840-00380	M39R4K55-UL	CU-EN06	4550	M39R6K90-UL	U-EN-DO18-1L	6900
FR-A840-00470	M30R5K62-UL	U-EN-DO09-1L	5620	M30R8K51-UL	U-EN-DO18-1L	8510
FR-A840-00620	M24R6K68-UL	U-EN-DO18-1L	6680	M24R10K1-UL	U-EN-DO27-1H	10100
FR-A840-00770	M17R9K11-UL	U-EN-DO18-1L	9110	M17R13K8-UL	U-EN-DO36-1H	13800
FR-A840-00930	M14R11K2-UL	U-EN-DO27-1H	11200	M14R17K0-UL	U-EN-DO36-1H	17000
FR-A840-01160	M13F7R13K7-UL	U-EN-DO27-1H	13700	M13F7R20K7-UL	U-EN-DO27-1H	20700
FR-A840-01800	M13F5R16K7-UL	U-EN-DO36-1H	16700	M13F5R25K3-UL	2X U-EN-DO27-1H	25300

Non-UL Standard Resistors

Model Number	Input Voltage (VAC)	Normal Duty (HP) VT	Braking Torque	Rated Resistor Ohms	10% Braking	Encl.	Watts	25% Braking	Encl.	Watts	33% Braking	Encl.	Watts	50% Braking	Encl.	Watts
FR-A820-00046	230	1	100%	150.0	M150R250W	EN00	250	M150R250W	EN00	250	M150R250W	EN00	250	M150R250W	EN00	250
FR-A820-00077	230	2	100%	121.0	M121R250W	EN00	250	M121R250W	EN00	250	M121R250W	EN00	250	M121R500W	EN01	500
FR-A820-00105	230	3	100%	67.0	M67R250W	EN00	250	M67R500W	EN01	500	M67R500W	EN01	500	M67R750W	DB3C	750
FR-A820-00167	230	5	100%	40.0	M40R250W	EN00	250	M40R506W	EN01	506	M40R750W	DB3C	750	M40R1K01	EN02	1010
FR-A820-00250	230	7.5	100%	36.0	M36R500W	EN01	500	M36R851W	EN02	851	M36R1K12	EN03	1120	M36R1K70	EN03	1700
FR-A820-00340	230	10	100%	24.0	M24R506W	EN01	506	M24R1K27	EN01	1270	M24R1K67	EN03	1670	M24R2K53	EN09	2530
FR-A820-00490	230	15	100%	19.8	M19F8R690W	DB3C	690	M19F8R2K00	EN09	2000	M19F8R2K28	EN09	2280	M19F8R3K45	EN09	3450
FR-A820-00630	230	20	100%	14.0	M14R1K50	EN02	1500	M14R2K53	EN06	2530	M14R3K34	EN06	3340	M14R5K06	EN09	5060
FR-A820-00770	230	25	100%	10.0	M10R1K38	EN02	1380	M10R3K45	EN06	3450	M10R4K55	EN06	4550	M10R6K90	EN18	6900
FR-A820-00930	230	30	100%	7.0	M7FR1K70	EN02	1700	M7FR4K26	EN09	4260	M7FR5K62	EN09	5620	M7FR8K51	EN18	8510
FR-A820-01250	230	40	100%	7.0	M7FR2K02	EN03	2020	M7FR5K06	EN09	5060	M7FR6K68	EN09	6680	M7FR10K1	EN18	10100
FR-A840-00023	460	1	100%	410.0	M410R720W	EN01	720	M410R720W	EN01	720	M410R720W	EN01	720	M410R720W	EN01	720
FR-A840-00038	460	2	100%	400.0	M400R720W	EN01	720	M400R720W	EN01	720	M400R720W	EN01	720	M400R720W	EN01	720
FR-A840-00052	460	3	100%	250.0	M250R360W	EN00	360	M250R360W	EN00	360	M250R360W	EN00	360	M250R360W	EN00	360
FR-A840-00083	460	5	100%	150.0	M150R250W	EN00	250	M150R506W	EN01	506	M150R750W	DB3C	750	M150R1K01	DB3C	1010
FR-A840-00126	460	7.5	100%	107.0	M107R500W	EN01	500	M107R1K00	DB3C	1000	M107R1K12	EN03	1120	M107R1K70	EN03	1700
FR-A840-00170	460	10	100%	75.0	M75R506W	EN01	506	M75R1K27	EN03	1270	M75R1K67	EN03	1670	M75R2K53	EN06	2530
FR-A840-00250	460	15	100%	55.0	M55R1K00	DB3C	1000	M55R2K00	EN03	2000	M55R2K28	EN06	2280	M55R3K45	EN06	3450
FR-A840-00310	460	20	100%	39.0	M39R1K01	EN02	1010	M39R2K53	EN06	2530	M39R3K34	EN06	3340	M39R5K06	EN18	5060
FR-A840-00380	460	25	100%	39.0	M39R1K38	EN03	1380	M39R3K45	EN09	3450	M39R4K55	EN18	4550	M39R6K90	EN18	6900
FR-A840-00470	460	30	100%	30.0	M30R1K70	EN04	1700	M30R4K26	EN09	4260	M30R5K62	EN18	5620	M30R8K51	EN18	8510
FR-A840-00620	460	40	100%	24.0	M24R2K02	EN09	2020	M24R5K06	EN18	5060	M24R6K68	EN18	6680	M24R10K1	EN18	10100
FR-A840-00770	460	50	100%	17.0	M17R2K76	EN09	2760	M17R6K90	EN18	6900	M17R9K11	EN18	9110	M17R13K8	EN27	13800
FR-A840-00930	460	60	100%	14.0	M14R3K40	EN06	3400	M14R8K51	EN18	8510	M14R11K2	EN18	11200	M14R17K0	EN27	17000
FR-A840-01160	460	75	100%	13.7	M13F7R4K14	EN06	4140	M13F7R10K4	EN18	10400	M13F7R13K7	EN18	13700	M13F7R20K7	HNS	20700
FR-A840-01800	460	100	80%	13.5	M13F5R5K06	EN09	5060	M13F5R12K7	EN18	12700	M13F5R16K7	EN27	16700	M13F5R25K3	HWS	25300

Regeneration duty factor (operation frequency)

$$\%ED = \frac{tb}{tc} \times 100 \quad tb<15s(\text{continuous operation time})$$

Example 1 Travel operation

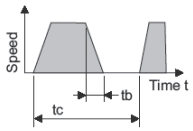

Example 2 Lift operation

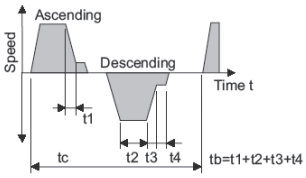

FR-HEL DC Link Chokes (sold separately)

Model Number	HD	ND	LD	SLD
FR-A840-02160-E1U6	FR-HEL-H75K	FR-HEL-H75K	FR-HEL-H90K	FR-HEL-H110K
FR-A840-02600-E1U6	FR-HEL-H90K	FR-HEL-H90K	FR-HEL-H110K	FR-HEL-H132K
FR-A840-03250-E1U6	FR-HEL-H110K	FR-HEL-H110K	FR-HEL-H132K	FR-HEL-H160K
FR-A840-03610-E1U6	FR-HEL-H132K	FR-HEL-H132K	FR-HEL-H160K	FR-HEL-H185K
FR-A840-04320-E1U6	FR-HEL-H160K	FR-HEL-H160K	FR-HEL-H185K	FR-HEL-H220K
FR-A840-04810-E1U6	FR-HEL-H185K	FR-HEL-H185K	FR-HEL-H220K	FR-HEL-H250K
FR-A840-05470-E1U6	FR-HEL-H220K	FR-HEL-H220K	FR-HEL-H250K	FR-HEL-H280K
FR-A840-06100-E1U6	FR-HEL-H250K	FR-HEL-H250K	FR-HEL-H280K	FR-HEL-H315K
FR-A840-06830-E1U6	FR-HEL-H280K	FR-HEL-H280K	FR-HEL-H315K	FR-HEL-H355K

Dimensions R-A800-E Series Drives

Series	Frame Size	Height	Width	Depth
		Dimensions Inches (mm)		
FR-A800	A	12.2 (310)	4.3 (110)	4.4 (112)
	B	12.2 (310)	4.3 (110)	5.0 (127)
	C	12.5 (318)	5.9 (150)	5.6 (142)
	D	12.8 (324)	8.7 (220)	6.7 (170)
	E	14.3 (363)	8.7 (220)	7.5 (190)
	F	20.4 (517)	9.8 (250)	7.5 (190)
	G	21.7 (550)	12.8 (325)	7.7 (195)
	H	21.7 (550)	17.1 (435)	9.8 (250)
	J	24.4 (620)	18.3 (465)	11.8 (300)
	K	27.6 (700)	18.3 (465)	9.8 (250)
	L	29.1 (740)	18.3 (465)	14.2 (360)
	M	39.8 (1010)	19.6 (498)	15.0 (380)
	N	39.8 (1010)	26.8 (680)	15.0 (380)

Series	Frame Size	Height	Width	Depth
		Dimensions Inches (mm)		
FR-A842	P	52.4 (1330)	21.3 (540)	17.3 (440)
	Q	62.2 (1580)	26.8 (680)	17.3 (440)
FR-CC2	R	52.4 (1330)	23.6 (660)	17.3 (440)
	S	62.2 (1580)	23.6 (660)	17.3 (440)

FR-A800-E Options and Accessories

Model Number	Description	Comments	Stocked Item
FR-A8AP	Encoder Feedback Card	Provides 1500:1 speed range and positioning control in Vector Mode	S
FR-A8AL	Encoder Feedback Card, Orient, Vector Position Control and Encoder Dividing Output	Multi-function feedback option – includes 1500:1 speed range and positioning control in vector mode, Ideal for spindle orient and machine tool	S
FR-A8TP	Vector Control Terminal Block	Enables encoder feedback on I/O terminal block instead of option card slot, combine with FR-A8AP for orient control	S
FR-A8ERS-60	A/F800 Series RS485 Option Card		S
FR-A8AX	16 Bit Digital Input Card	BCD or Binary input	S
FR-A8AY	Digital Output / Extended Analog Output Card	2 extra 0-20 mA or 0-10V output signals	S
FR-A8AR	Relay Output Card	3 extra independent type 'C' relays	S
FR-A8AZ	High Res. Analog / Thermistor input Card		-
FR-A8AC	A800 120V Control Option		S
FR-A8AN	F/A800 4-20mA I/O Card		S
FR-A8APR	Resolver Interface / Orientation Card		-
FR-A8APS	Absolute Encoder Option	EnDat 2.x Interface	S
FR-A8NC	CC-Link Communications Card	A6CON-L5P / A6CON-TR11N connectors not included with Option card (Sold Separately)	S
FR-A8ND	DeviceNet Communications Card		S
FR-A8NP	PROFIBUS DPV0 Communications Card		S
A8NDPV1	PROFIBUS DPV1 Communications Card		S
FR-A8NF	FL-Net Communications Card		S
A8N-XLT	Muli-protocol RS485 Communications Card	(BACnet® MS/TP), Siemens FLN (P1), Metasys® N2	S
FR-A8NS	SSCNET III / F Communications Card		-
A8NEIP-2P	EtherNET IP™ Communications Card		S
A8NPRT-2P	PROFINET® Communications Card		S
FR-A8NCN	ControlNet™ Communications Card		S
FR-A8NCE	CC-Link® IE Communications Card		S
FR-A8NCG	CC-Link® IE TSN Communications Card		S
FR-A8NCA	CanOpen Communication Card		-
FR-A8NL	LonWorks Communication Card		S
A8NECT-2P	EtherCAT® Communications Card		S
A8NETH-2P	Multi-protocol EtherNET Communications Card	EtherNET IP, MODBUS TCP/IP, Profinet, BACnet IP	S
FR-LU08	Liquid Crystal Operation Panel	Mount on VFD or panel	S
FR-PU07, FR-PU07-01	Parameter Unit	Mount on panel only. FR-PU07-1 is for HVAC	S
FR-PU07BB-L	Parameter Unit with Battery Back-up	Handheld. Can program unpowered drives	S
FR-CB20_ (_ = 1, 3 or 5)	Parameter Unit Connection Cable	1, 3 or 5 meter lengths	S
FR-ADP	Keypad Adaptor Unit	Connect FR-DU08 or FR-LU08 to FR-CB2	S
FR-A8TAT	Control Terminal Block Adaptor	Use A500 or A700 terminal block with A800	S
FR-A8TR	Screw Terminal Block Option	Screw Terminal Block Option	S
FR-ABR	High Duty Brake Resistor	Use with drives 30HP or below (ND rating)	S
FR-BR	Brake Resistor	Use with drives 75HP or below (ND rating)	S
MT-BR5	Brake Resistor	Use with drives 100HP or below (ND rating)	S
FR-CV, FR-CVL	Regenerative Controller	Use with drives 75HP or below (ND rating)	S
MT-RC	Regenerative Controller	Use with drives 100HP or ABOVE (ND rating)	-
FR-HC2	Zero Harmonic Controller	Available for all sizes	S
FR-HEL, FR-HEL-H, FR-HEL-C	DC Link Choke	Use in accordance with selection guide	S
FR-CONFIGURATOR2	Software Setup Utility for FR-800 Series		S

External Heatsink Attachment

Drive Model F/A820	Drive Model F/A840	Model Number	Stocked Item
00105, 00167, 00250	00023, 00038, 00052, 00083, 00126	**FR-A8CN01**	S
00340, 00490	00170, 00250	**FR-A8CN02**	S
00630	00310, 00380	**FR-A8CN03**	S
00770, 00930, 01250	00470, 00620	**FR-A8CN04**	S
01540	00770	**FR-A8CN05**	S
01870, 02330	00930, 01160, 01800	**FR-A8CN06**	S
03160	-	**FR-A8CN07**	S
03800, 04750	03250, 03610	**FR-A8CN08**	S
-	02160, 02600	**FR-A8CN09**	S

NEMA 1 Conduit Mounting Kits for A and FR-F800 Series Drives

Kits have provision for DC link choke installation (Drives in frame sizes A to F do not require a separate kit)

Model Number	A/F820	A/F840	Frame Size
AF8FN-G	01540	00770	G
AF8FN-H	01870	00930	H
	02330	01160	
	-	01800	
AF8FN-J	-	02160	J
	-	02600	
AF8FN-K	03160	-	K
AF8FN-L	03800	03250	L
	04750	03610	
AF8FN-M	-	04320	M
	-	04810	
AF8FN-N	-	05470	N
	-	06100	
	-	06830	

FR-A800-GF Series

The FR-A800-GF inverter is the CC-Link IE Field Network communication model with the built-in communication function. / It is ready for immediate operation via the CC-Link IE Field Network.

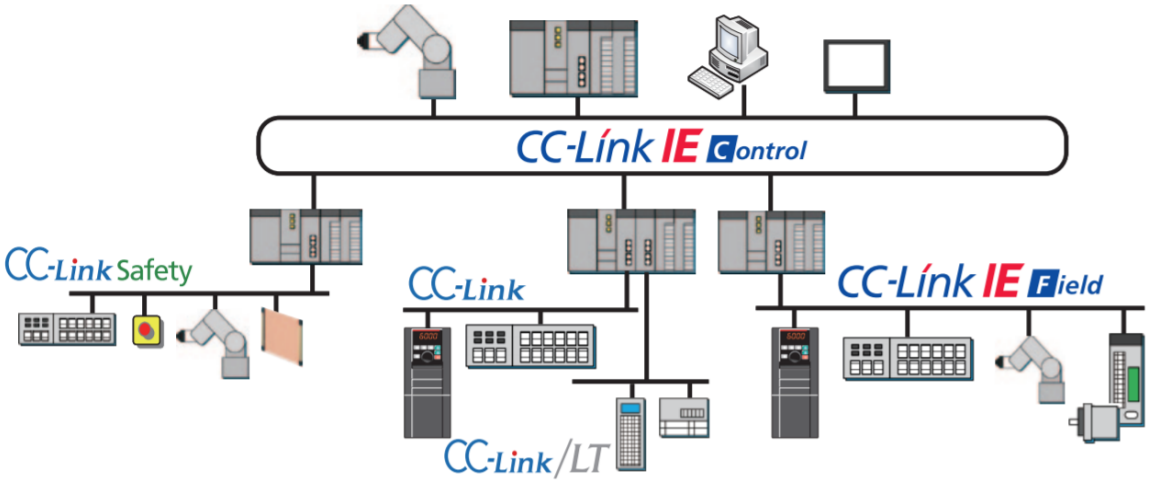

A function block (FB) programming for CC-Link communication is available for the MELSEC-Q/L series to create the inverter control sequencing programs easily.

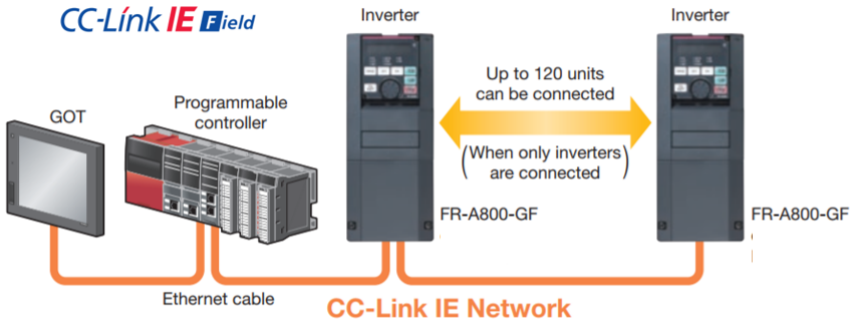

200V

Model Number	AMPS For Duty	Horsepower Duty (NEC)							Frame Size	Weight (lbs)	Cooling Method	Protective Rating
	SLD	LD	ND	HD	SLD	LD	ND	HD				
A820-00046-1-N6GF	4.6	4.2	3	1.5	1	1	0.75	0.25	A	5.5	Self-Cooling	NEMA 1, UL Type-1, Plenum Rated (IP20)
A820-00077-1-N6GF	7.7	7	5	3	2	2	1	0.5	B	5.9		
A820-00105-1-N6GF	10.5	9.6	8	5	3	3	2	1		8.8	Forced-Air Cooling	
A820-00167-1-N6GF	16.7	15.2	11	8	5	5	3	2	C	8.8		
A820-00250-1-N6GF	25	23	17.5	11	7.5	7.5	5	3		8.8		
A820-00340-1-N6GF	34	31	24	17.5	10	10	7.5	5		16.7		
A820-00490-1-N6GF	49	45	33	24	20	15	10	7.5	D	16.7		
A820-00630-1-N6GF	63	58	46	33	20	20	15	10	E	20.5		
A820-00770-1-N6GF	77	70.5	61	46	25	25	20	15		37.4		
A820-00930-1-N6GF	93	85	76	61	30	30	25	20	F	37.4		
A820-01250-1-N6GF	125	114	90	76	40	40	30	25		37.4		
A820-01540-1-60GF	154	140	115	90	60	50	40	30	G	48.4		(IP00)
A820-01870-1-60GF	187	170	145	115	60	60	50	40		92.4		
A820-02330-1-60GF	233	212	175	145	75	75	60	50	H	92.4		
A820-03160-1-60GF	316	288	215	175	125	100	75	60	K	118.8		
A820-03800-1-U6GF	380	346	288	215	150	125	100	75		162.8		
A820-04750-1-U6GF	475	432	346	288	150	150	125	100	L	162.8		

Model Number	AMPS For Duty	Horsepower Duty (NEC)							Frame Size	Weight (lbs)	Cooling Method	Protective Rating
	SLD	LD	ND	HD	SLD	LD	ND	HD				
A840-00023-1-N6GF	2.3	2.1	1.5	0.8	1	1	0.5	0.25	C	7.7	Self-Cooling	NEMA 1, UL Type-1, Plenum Rated (IP20)
A840-00038-1-N6GF	3.8	3.5	2.5	1.5	2	2	1	0.5		7.7		
A840-00052-1-N6GF	5.2	4.8	4	2.5	3	3	2	1		7.7		
A840-00083-1-N6GF	8.3	7.6	6	4	5	5	3	2		8.8	Forced-Air Cooling	
A840-00126-1-N6GF	12.6	11.5	9	6	7.5	7.5	5	3		8.8		
A840-00170-1-N6GF	17	16	12	9	10	10	7.5	5	D	16.7		
A840-00250-1-N6GF	25	23	17	12	15	15	10	7.5		16.7		
A840-00310-1-N6GF	31	29	23	17	20	20	15	10	E	20.5		
A840-00380-1-N6GF	38	35	31	23	25	25	20	15		20.5		
A840-00470-1-N6GF	47	43	38	31	30	30	25	20	F	37.4		
A840-00620-1-N6GF	62	57	44	38	40	40	30	25		37.4		
A840-00770-1-60GF	77	70	57	44	60	50	40	30	G	50.6		(IP00)
A840-00930-1-60GF	93	85	71	57	60	60	50	40	H	90.2		
A840-01160-1-60GF	116	106	86	71	75	75	60	50		90.2		
A840-01800-1-60GF	180	144	110	86	150	100	75	60		94.6		
A840-02160-1-U6GF	216	180	144	110	150	150	100	75	J	114.4		
A840-02600-1-U6GF	260	216	180	144	200	150	150	100		121		
A840-03250-1-U6GF	325	260	216	180	250	200	150	150	L	156.2		
A840-03610-1-U6GF	361	325	260	216	300	250	200	150		171.6		
A840-04320-1-U6GF	432	361	325	260	350	300	250	200	M	257.4		
A840-04810-1-U6GF	481	432	361	325	400	350	300	250		257.4		
A840-05470-1-U6GF	547	481	432	361	450	400	350	300	N	365.2		
A840-06100-1-U6GF	610	547	481	432	500	450	400	350		365.2		
A840-06830-1-U6GF	683	610	547	481	550	500	450	400		365.2		
A842-07700-1-U6GF + FR-CC2-H315K-60	-	-	610	547	-	-	500	450	P+R	820.6		
A842-08660-1-U6GF + FR-CC2-H315K-60	-	-	-	610	-	-	-	500		820.6		
A842-07700-1-U6GF + FR-CC2-H355K-60	-	683	-	-	-	550	-	-		827.2		
A842-08660-1-U6GF + FR-CC2-H355K-60	-	-	683	-	-	-	550	-		827.2		
A842-09620-1-U6GF + FR-CC2-H355K-60	-	-	-	683	-	-	-	550	Q+R	1003.2		
A842-07700-1-U6GF + FR-CC2-H400K-60	770	-	-	-	650	-	-	-	P+S	979		
A842-08660-1-U6GF + FR-CC2-H400K-60	-	770	-	-	-	650	-	-		979		
A842-09620-1-U6GF + FR-CC2-H400K-60	-	-	770	-	-	-	650	-	Q+S	1155		
A842-10940-1-U6GF + FR-CC2-H400K-60	-	-	-	770	-	-	-	650		1155		
A842-08660-1-U6GF + FR-CC2-H450K-60	866	-	-	-	700	-	-	-	P+S	986		
A842-09620-1-U6GF + FR-CC2-H450K-60	-	866	-	-	-	700	-	-	Q+S	1162		
A842-10940-1-U6GF + FR-CC2-H450K-60	-	-	866	-	-	-	700	-		1162		
A842-12120-1-U6GF + FR-CC2-H450K-60	-	-	-	866	-	-	-	700		1162		
A842-09620-1-U6GF + FR-CC2-H500K-60	962	-	-	-	800	-	-	-		1168		
A842-10940-1-U6GF + FR-CC2-H500K-60	-	962	-	-	-	800	-	-		1168		
A842-12120-1-U6GF + FR-CC2-H500K-60	-	-	962	-	-	-	800	-		1168		
A842-10940-1-U6GF + FR-CC2-H560K-60	1094	-	-	-	900	-	-	-		1179		
A842-12120-1-U6GF + FR-CC2-H560K-60	-	1094	-	-	-	900	-	-		1179		
A842-12120-1-U6GF + FR-CC2-H630K-60	1212	-	-	-	1000	-	-	-		1181		

FR-A800 Plus

FR-A800 Plus takes the outstanding performance and functionality of the regular FR-A800 VFD and combines it with special firmware to make a drive dedicated to specific industry sectors. For main specifications please refer to the standard FR-A800 section. Note that FR-A800 Plus is not currently available as a 600V version.

FR-A800CRN Crane Control version of FR-A800 includes:

- **Anti-Sway Control –** Eliminates swinging loads caused by speed changes during load handling, ensuring smoother operation and reduced 'tact' time
- **Shortest Time Start-up Feature –** Adapts to changing load masses
- **Dedicated Sequencing System –** Interface with mechanical brakes during raising and lowering
- **Falling Load Detection –** Detects unexpected load dropping
- **Hoist and Travel Control –** Coordinates lifting and traveling operations

FR-A800R2R Roll-to-Roll version of FR-A800 for wind/unwind and tension control applications includes:

- **Diameter Calculation Capability –** Detects initial roll diameter and calculates diameter change during operation
- **Dedicated PI Control System –** Ensures smooth tension control
- **Process Compensation –** Adjusts for load inertia during speed changes
- **Break Detection –** Detects a breakage in material between rolls
- **Taper Function –** Allows a gradual change in tension to avoid wrinkling or stretching of films as the load diameter changes
- **SND Rating –** An extra duty rating which allows higher operating current than ND rating while still allowing 150% motor current overload for 60 seconds (short time overload is removed)

FR-A800AWH Automated Warehouse version of FR-A800 includes:

- **Full-Closed Control:** highly accurate positioning is unaffected by mechanical conditions
- **Anti-sway function:** minimizes sway in the frame of the crane while shuttle car is travelling
- **S-Curve Accel/Decel:** select the acceleration/deceleration pattern to prevent load shifting during transportation and enabling faster operation.
- **Dual feedback control:** suppress variation in motor speeds caused by vibrations in the shuttle car.
- **Parametrization of key parameters:** Set target position, motor speed, accel/decel time through VFD parameters, eliminating need of PLC programming.

Part Number System

The basic part numbering system is the same as for the standard drives but includes a suffix at the end.

A ❶ - ❷ -1- ❸ ❹



❶ Voltage

Symbol	Voltage Class
820	240V Class
840	480V Class

❷ Capacity

Symbol
See FR-A800 section for available capacities.

❸ Rating

Symbol	Control
N6	NEMA1, UL TYPE1, IP20
60	IP00
U6	IP00

❹ Control

Symbol	Control
CRN	Crane Control
R2R	Roll-to-Roll Control
AWH	Automated Warehouse Control

FR-A800-R2R

In roll-to-roll applications, control is necessary for machining of elongated products such as paper, film, and thread. Processing types include printing, slitting, coating, and twisting. High productivity can be achieved by stable tension control. The FR-A800-R2R inverter has various dedicated functions such as winding diameter calculation, providing stable winding/unwinding control independently.

200V

Model Number	AMPS For Duty					Horsepower For Duty (NEC)					Frame Size	Weight (lbs)	Cooling Method	Protective Rating
	SLD	LD	SND	ND	HD	SLD	LD	SND	ND	HD				
A820-00046-1-N6R2R	4.6	4.2	4.2	3	1.5	1	1	1	0.75	0.25	A	5.5	Self-Cooling	NEMA 1, UL Type-1, Plenum Rated (IP20)
A820-00077-1-N6R2R	7.7	7	7	5	3	2	2	2	1	0.5	B	5.9		
A820-00105-1-N6R2R	10.5	9.6	9.6	8	5	3	3	3	2	1		8.8	Forced-Air Cooling	
A820-00167-1-N6R2R	16.7	15.2	15.2	11	8	5	5	5	3	2	C	8.8		
A820-00250-1-N6R2R	25	23	23	17.5	11	7.5	7.5	7.5	5	3		8.8		
A820-00340-1-N6R2R	34	31	31	24	17.5	10	10	10	7.5	5		16.7		
A820-00490-1-N6R2R	49	45	36	33	24	20	15	15	10	7.5	D	16.7		
A820-00630-1-N6R2R	63	58	58	46	33	20	20	20	15	10	E	20.5		
A820-00770-1-N6R2R	77	70.5	70.5	61	46	25	25	25	20	15		37.4		
A820-00930-1-N6R2R	93	85	85	76	61	30	30	30	25	20	F	37.4		
A820-01250-1-N6R2R	125	114	102	90	76	40	40	30	30	25		37.4		
A820-01540-1-60R2R	154	140	126	115	90	60	50	40	40	30	G	48.4		(IP00)
A820-01870-1-60R2R	187	170	170	145	115	60	60	50	50	40		92.4		
A820-02330-1-60R2R	233	212	190	175	145	75	75	60	60	50	H	92.4		
A820-03160-1-60R2R	316	288	259	215	175	125	100	75	75	60	K	118.8		
A820-03800-1-U6R2R	380	346	346	288	215	150	125	100	100	75		162.8		
A820-04750-1-U6R2R	475	432	388	346	288	150	150	125	125	100	L	162.8		

400V

Model Number	AMPS For Duty					Horsepower For Duty (NEC)					Frame Size	Weight (lbs)	Cooling Method	Protective Rating
	SLD	LD	SND	ND	HD	SLD	LD	SND	ND	HD				
A840-00023-1-N6R2R	2.3	2.1	2.1	1.5	0.8	1	1	1	0.5	0.25	C	7.7	Self-Cooling	NEMA 1, UL Type-1, Plenum Rated (IP20)
A840-00038-1-N6R2R	3.8	3.5	3.5	2.5	1.5	2	2	2	1	0.5		7.7		
A840-00052-1-N6R2R	5.2	4.8	4.8	4	2.5	3	3	3	2	1		7.7		
A840-00083-1-N6R2R	8.3	7.6	7.6	6	4	5	5	5	3	2		8.8	Forced-Air Cooling	
A840-00126-1-N6R2R	12.6	11.5	11.5	9	6	7.5	7.5	7.5	5	3		8.8		
A840-00170-1-N6R2R	17	16	16	12	9	10	10	10	7.5	5		16.7		
A840-00250-1-N6R2R	25	23	23	17	12	15	15	15	10	7.5	D	16.7		
A840-00310-1-N6R2R	31	29	29	23	17	20	20	20	15	10		20.5		
A840-00380-1-N6R2R	38	35	35	31	23	25	25	25	20	15	E	20.5		
A840-00470-1-N6R2R	47	43	43	38	31	30	30	30	25	20		37.4		
A840-00620-1-N6R2R	62	57	57	44	38	40	40	40	30	25	F	37.4		
A840-00770-1-60R2R	77	70	70	57	44	60	50	50	40	30	G	50.6		(IP00)
A840-00930-1-60R2R	93	85	85	71	57	60	60	60	50	40		90.2		
A840-01160-1-60R2R	116	106	106	86	71	75	75	75	60	50	H	90.2		
A840-01800-1-60R2R	180	144	129	110	86	150	100	75	75	60		94.6		
A840-02160-1-U6R2R	216	180	180	144	110	150	150	150	100	75		114.4		
A840-02600-1-U6R2R	260	216	194	180	144	200	150	150	150	100	J	121		
A840-03250-1-U6R2R	325	260	260	216	180	250	200	200	150	150		156.2		
A840-03610-1-U6R2R	361	325	325	260	216	300	250	250	200	150	L	171.6		
A840-04320-1-U6R2R	432	361	361	325	260	350	300	300	250	200		257.4		
A840-04810-1-U6R2R	481	432	432	361	325	400	350	350	300	250	M	257.4		
A840-05470-1-U6R2R	547	481	481	432	361	450	400	400	350	300		365.2		
A840-06100-1-U6R2R	610	547	547	481	432	500	450	450	400	350	N	365.2		
A840-06830-1-U6R2R	683	610	610	547	481	550	500	500	450	400		365.2		

Overload Current Rating *	SLD	110% 60 s, 120% 3 s (inverse-time characteristics) at surrounding air temperature of 40°C
	LD	120% 60 s, 150% 3 s (inverse-time characteristics) at surrounding air temperature of 50°C
	SND	150% 60 s (inverse-time characteristics) at surrounding air temperature of 50°C
	ND	150% 60 s, 200% 3 s (inverse-time characteristics) at surrounding air temperature of 50°C
	HD	200% 60 s, 250% 3 s (inverse-time characteristics) at surrounding air temperature of 50°C

* The % value of the overload current rating indicated is the ratio of the overload current to the inverter's rated output current.
For repeated duty, allow time for the inverter and motor to return to or below the temperatures under 100% load.

FR-A800-CRN

The FR-A800-CRN inverter is dedicated for crane and hoist applications. Due to its embedded functions such as “swinging suppression control”, “shortest time torque startup function”, as well as “load-based speed control”, the dedicated CRN features allow the optimization of tact time, which will increase productivity and user safety.

200V

Model Number	AMPS For Duty				Horsepower Duty (NEC)				Frame Size	Weight (lbs)	Cooling Method	Protective Rating
	SLD	LD	ND	HD	SLD	LD	ND	HD				
A820-00046-1-N6CRN	4.6	4.2	3	1.5	1	1	0.75	0.25	A	5.5	Self-Cooling	NEMA 1, UL Type-1, Plenum Rated (IP20)
A820-00077-1-N6CRN	7.7	7	5	3	2	2	1	0.5	B	5.9		
A820-00105-1-N6CRN	10.5	9.6	8	5	3	3	2	1		8.8	Forced-Air Cooling	
A820-00167-1-N6CRN	16.7	15.2	11	8	5	5	3	2	C	8.8		
A820-00250-1-N6CRN	25	23	17.5	11	7.5	7.5	5	3		8.8		
A820-00340-1-N6CRN	34	31	24	17.5	10	10	7.5	5		16.7		
A820-00490-1-N6CRN	49	45	33	24	20	15	10	7.5	D	16.7		
A820-00630-1-N6CRN	63	58	46	33	20	20	15	10	E	20.5		
A820-00770-1-N6CRN	77	70.5	61	46	25	25	20	15		37.4		
A820-00930-1-N6CRN	93	85	76	61	30	30	25	20	F	37.4		
A820-01250-1-N6CRN	125	114	90	76	40	40	30	25		37.4		
A820-01540-1-60CRN	154	140	115	90	60	50	40	30	G	48.4		(IP00)
A820-01870-1-60CRN	187	170	145	115	60	60	50	40		92.4		
A820-02330-1-60CRN	233	212	175	145	75	75	60	50	H	92.4		
A820-03160-1-60CRN	316	288	215	175	125	100	75	60	K	118.8		
A820-03800-1-U6CRN	380	346	288	215	150	125	100	75		162.8		
A820-04750-1-U6CRN	475	432	346	288	150	150	125	100	L	162.8		

400V

Model Number	AMPS For Duty				Horsepower Duty (NEC)				Frame Size	Weight (lbs)	Cooling Method	Protective Rating
	SLD	LD	ND	HD	SLD	LD	ND	HD				
A840-00023-1-N6CRN	2.3	2.1	1.5	0.8	1	1	0.5	0.25	C	7.7	Self-Cooling	NEMA 1, UL Type-1, Plenum Rated (IP20)
A840-00038-1-N6CRN	3.8	3.5	2.5	1.5	2	2	1	0.5		7.7		
A840-00052-1-N6CRN	5.2	4.8	4	2.5	3	3	2	1		7.7		
A840-00083-1-N6CRN	8.3	7.6	6	4	5	5	3	2		8.8	Forced-Air Cooling	
A840-00126-1-N6CRN	12.6	11.5	9	6	7.5	7.5	5	3		8.8		
A840-00170-1-N6CRN	17	16	12	9	10	10	7.5	5		16.7		
A840-00250-1-N6CRN	25	23	17	12	15	15	10	7.5	D	16.7		
A840-00310-1-N6CRN	31	29	23	17	20	20	15	10		20.5		
A840-00380-1-N6CRN	38	35	31	23	25	25	20	15	E	20.5		
A840-00470-1-N6CRN	47	43	38	31	30	30	25	20		37.4		
A840-00620-1-N6CRN	62	57	44	38	40	40	30	25	F	37.4		
A840-00770-1-60CRN	77	70	57	44	60	50	40	30	G	50.6		(IP00)
A840-00930-1-60CRN	93	85	71	57	60	60	50	40		90.2		
A840-01160-1-60CRN	116	106	86	71	75	75	60	50	H	90.2		
A840-01800-1-60CRN	180	144	110	86	150	100	75	60		94.6		
A840-02160-1-U6CRN	216	180	144	110	150	150	100	75		114.4		
A840-02600-1-U6CRN	260	216	180	144	200	150	150	100	J	121		
A840-03250-1-U6CRN	325	260	216	180	250	200	150	150		156.2		
A840-03610-1-U6CRN	361	325	260	216	300	250	200	150	L	171.6		
A840-04320-1-U6CRN	432	361	325	260	350	300	250	200		257.4		
A840-04810-1-U6CRN	481	432	361	325	400	350	300	250	M	257.4		
A840-05470-1-U6CRN	547	481	432	361	450	400	350	300		365.2		
A840-06100-1-U6CRN	610	547	481	432	500	450	400	350	N	365.2		
A840-06830-1-U6CRN	683	610	547	481	550	500	450	400		365.2		

Select a reactor according to the applied motor capacity.

Overload Current Rating *	SLD	110% 60 s, 120% 3 s (inverse-time characteristics) at surrounding air temperature of 40°C
	LD	120% 60 s, 150% 3 s (inverse-time characteristics) at surrounding air temperature of 50°C
	ND	200% 60 s, 250% 3 s (inverse-time characteristics) at surrounding air temperature of 50°C
	HD	200% 60 s, 250% 3 s (inverse-time characteristics) at surrounding air temperature of 50°C

* The % value of the overload current rating indicated is the ratio of the overload current to the inverter's rated output current.
For repeated duty, allow time for the inverter and motor to return to or below the temperatures under 100% load.

FR-A800-AWH

The FR-A800-AWH inverter has various functions dedicated to automated storage and retrieval systems. Dedicated functions such as dual feedback control, anti-sway control, and fully closed position loop control enables an efficient solution for logistics and transportation equipment.

200V

Model Number		AMPS For Duty				Horsepower Duty (NEC)				Frame Size	Weight (lbs)	Cooling Method	Protective Rating
Ethernet	Serial	SLD	LD	ND	HD	SLD	LD	ND	HD				
A820-00046-E1N6AWH	A820-00046-1-N6AWH	4.6	4.2	3	1.5	1	1	0.75	0.25	A	5.5	Self-Cooling	NEMA 1, UL Type-1, Plenum Rated (IP20))
A820-00077-E1N6AWH	A820-00077-1-N6AWH	7.7	7	5	3	2	2	1	0.5	B	5.9		
A820-00105-E1N6AWH	A820-00105-1-N6AWH	10.5	9.6	8	5	3	3	2	1		8.8	Forced-Air Cooling	
A820-00167-E1N6AWH	A820-00167-1-N6AWH	16.7	15.2	11	8	5	5	3	2	C	8.8		
A820-00250-E1N6AWH	A820-00250-1-N6AWH	25	23	17.5	11	7.5	7.5	5	3		8.8		
A820-00340-E1N6AWH	A820-00340-1-N6AWH	34	31	24	17.5	10	10	7.5	5		16.7		
A820-00490-E1N6AWH	A820-00490-1-N6AWH	49	45	33	24	20	15	10	7.5	D	16.7		
A820-00630-E1N6AWH	A820-00630-1-N6AWH	63	58	46	33	20	20	15	10	E	20.5		
A820-00770-E1N6AWH	A820-00770-1-N6AWH	77	70.5	61	46	25	25	20	15		37.4		
A820-00930-E1N6AWH	A820-00930-1-N6AWH	93	85	76	61	30	30	25	20	F	37.4		
A820-01250-E1N6AWH	A820-01250-1-N6AWH	125	114	90	76	40	40	30	25		37.4		
A820-01540-E160AWH	A820-01540-1-60AWH	154	140	115	90	60	50	40	30	G	48.4		(IP00)
A820-01870-E160AWH	A820-01870-1-60AWH	187	170	145	115	60	60	50	40		92.4		
A820-02330-E160AWH	A820-02330-1-60AWH	233	212	175	145	75	75	60	50	H	92.4		
A820-03160-E160AWH	A820-03160-1-60AWH	316	288	215	175	125	100	75	60	K	118.8		
A820-03800-E1U6AWH	A820-03800-1-U6AWH	380	346	288	215	150	125	100	75		162.8		
A820-04750-E1U6AWH	A820-04750-1-U6AWH	475	432	346	288	150	150	125	100	L	162.8		

400V

Model Number		AMPS For Duty				Horsepower Duty (NEC)				Frame Size	Weight (lbs)	Cooling Method	Protective Rating
Ethernet	Serial	SLD	LD	ND	HD	SLD	LD	ND	HD				
A840-00023-E1N6AWH	A840-00023-1-N6AWH	2.3	2.1	1.5	0.8	1	1	0.5	0.25	C	7.7	Self-Cooling	NEMA 1, UL Type-1, Plenum Rated (IP20)
A840-00038-E1N6AWH	A840-00038-1-N6AWH	3.8	3.5	2.5	1.5	2	2	1	0.5		7.7		
A840-00052-E1N6AWH	A840-00052-1-N6AWH	5.2	4.8	4	2.5	3	3	2	1		7.7		
A840-00083-E1N6AWH	A840-00083-1-N6AWH	8.3	7.6	6	4	5	5	3	2		8.8	Forced-Air Cooling	
A840-00126-E1N6AWH	A840-00126-1-N6AWH	12.6	11.5	9	6	7.5	7.5	5	3		8.8		
A840-00170-E1N6AWH	A840-00170-1-N6AWH	17	16	12	9	10	10	7.5	5		16.7		
A840-00250-E1N6AWH	A840-00250-1-N6AWH	25	23	17	12	15	15	10	7.5	D	16.7		
A840-00310-E1N6AWH	A840-00310-1-N6AWH	31	29	23	17	20	20	15	10		20.5		
A840-00380-E1N6AWH	A840-00380-1-N6AWH	38	35	31	23	25	25	20	15	E	20.5		
A840-00470-E1N6AWH	A840-00470-1-N6AWH	47	43	38	31	30	30	25	20		37.4		
A840-00620-E1N6AWH	A840-00620-1-N6AWH	62	57	44	38	40	40	30	25	F	37.4		
A840-00770-E160AWH	A840-00770-1-60AWH	77	70	57	44	60	50	40	30	G	50.6		(IP00)
A840-00930-E160AWH	A840-00930-1-60AWH	93	85	71	57	60	60	50	40		90.2		
A840-01160-E160AWH	A840-01160-1-60AWH	116	106	86	71	75	75	60	50	H	90.2		
A840-01800-E160AWH	A840-01800-1-60AWH	180	144	110	86	150	100	75	60		94.6		
A840-02160-E1U6AWH	A840-02160-1-U6AWH	216	180	144	110	150	150	100	75		114.4		
A840-02600-E1U6AWH	A840-02600-1-U6AWH	260	216	180	144	200	150	150	100	J	121		

Select a reactor according to the applied motor capacity.

Overload Current Rating *	SLD	110% 60 s, 120% 3 s (inverse-time characteristics) at surrounding air temperature of 40°C
	LD	120% 60 s, 150% 3 s (inverse-time characteristics) at surrounding air temperature of 50°C
	ND	150% 60 s, 200% 3 s (inverse-time characteristics) at surrounding air temperature of 50°C
	HD	200% 60 s, 250% 3 s (inverse-time characteristics) at surrounding air temperature of 50°C

*The % value of the overload current rating indicated is the ratio of the overload current to the inverter's rated output current. For repeated duty, allow time for the inverter and motor to return to or below the temperatures under 100% load.

FR-A800-LC

The FR-A800-LC series VFD is well suited for locations when air-cooling would be difficult and extremely expensive or when control system space is at a premium. Liquid cooling enables new applications in the environments where heat is difficult to dissipate and coolant is used for keeping the inside of the inverters cool. Equipped with a built-in EMC filter (capacitive filter) and a common mode choke, the FR-A800-LC are suitable for various mining and heavy industry applications.



FR-A800-LC Part Number Configuration

A 8 ❶ 0 - ❷ - ❸ - ❹ ❺

❶ Voltage

Symbol	Voltage Class
4	400V class
7	690V class

❷ Capacity

Voltage Class	Symbol	Description
400V Class	110K to 280K	Inverter ND rated capacity (kW)
	03250 to 06830	Inverter rated current (SLD rated current of the standard FR-A800 inverter) (A)
690V Class	280K, 355K	Inverter ND rated capacity (kW)
	03590, 04560	Inverter SLD rated current (A)

❸ Monitor Output

Symbol	Description
1	FM
2	CA (*1)

Note 1: For the CA type, the monitor output terminal FM/CA operates as terminal CA (analog current output: 0 to 20 mADC), not as terminal FM (pulse train output).

❹ Circuit Board Coating

Symbol	Circuit Board Coating (Conforming to IEC60721-3-3 3C2/3S2)	Plated Conductor
None	Without	Without
60	With	Without
06	With	With

❺ Type

Symbol	Description
None	Standard type
LC	Liquid cooled type

DC Reactor Part Number Configuration

FR-HEL- ❶ ❷

❶ Voltage

Symbol	Voltage Class
H	400V class (*1)
N	690V class

Note 1: For the details of the 400V class, refer to the FR-A800 inverter manual.

❷ Capacity

Symbol	Description
280K to 400K	Applied motor capacity (kW)

DC Reactor

Model Number		FR-HEL-N
Stocked Item		-
Power Factor Improving Effect (*1)		Power supply power factor approx. 93% (at 100% load)
Power Specifications		Three-phase 525 to 690 VAC 50/60 Hz
Environment	Surrounding Air Temperature	-10°C to + 50°C (non-freezing)
	Ambient Humidity	90%RH or less (non-condensing)
	Storage Temperature	-20°C to + 65°C (non-freezing)
	Atmosphere	Indoors (free from corrosive gas, flammable gas, oil mist, dust and dirt)
	Altitude/Vibration	Max.1000 m, 5.9 m/s² or less

Note 1: The power factor is calculated on the assumption that the power impedance is 1%. The value changes according to the power supply capacity and power impedance.

FR-A800-LC Specifications

Model Number			FR-A840-_-LC							FR-A870-_-LC	
			110K	132K	160K	185K	220K	250K	280K	280K	355K
			03250	03610	04320	04810	05470	06100	06830	03590	04560
Stocked Item			-	-	-	-	-	-	-	-	-
Applicable Motor Capacity (kW) (*1)		SLD	-							315	400
		LD	132	160	185	220	250	280	315	-	
		ND (Initial Setting)	110	132	160	185	220	250	280	280	355
Output	Rated Capacity (kVA) (*2)	SLD	-							429	545
		LD	198	248	275	329	367	417	465	-	
		ND (Initial Setting)	165	198	248	275	329	367	417	382	484
	Rated Current (A)	SLD	-							359	456
		LD	260	325	361	432	481	547	610	-	
		ND (Initial Setting)	216	260	325	361	432	481	547	320	405
	Overload Current Rating (*3)	SLD	-							110% 60 s, 120% 3 s (inverse-time characteristics) at surrounding air temperature of 40°C	
		LD	120% 60 s, 150% 3 s (inverse-time characteristics) at surrounding air temperature of 50°C							-	
		ND (Initial Setting)	150% 60 s, 200% 3 s (inverse-time characteristics) at surrounding air temperature of 50°C							150% 60 s, 200% 3 s (inverse-time characteristics) at surrounding air temperature of 50°C	
	Rated Voltage (*4)		Three-phase 380 to 500 V							Three-phase 525 to 690V	
Power Supply	Rated input AC Voltage/Frequency		Three-phase 380 to 500 V 50/60 Hz (*7)							Three-phase 525 to 690V 50/60 Hz	
	Permissible AC Voltage Fluctuation		323 V to 550 V 50/60 Hz							525V to 759V 50/60 Hz	
	Permissible Frequency Fluctuation		±5%								
	Rated Input Current (A) (*5)	SLD	-							359	456
		LD	260	325	361	432	481	547	610	-	
		ND (Initial Setting)	216	260	325	361	432	481	547	320	405
	Power Supply Capacity (kVA) (*6)	SLD	-							429	545
		LD	198	248	275	329	367	417	465	-	
		ND (Initial Setting)	165	198	248	275	329	367	417	382	484
Protective Structure (IEC 60529)			Open type (IP00) (*8)								
Cooling System			Liquid cooling + forced air cooling								
Operation Panel			Accessory cover							FR-DU08	
Approx. Weight (kg) (*8)			83	83	124	124	172	172	172	212	212
Environment	Surrounding Air Temperature (*9)		-10°C to +50°C (non-freezing) (LD and ND ratings); -10°C to +40°C (non-freezing) (SLD rating)								
	Surrounding Air Humidity		95% RH or less (non-condensing) (With circuit board coating (conforming to IEC60721-3-3 3C2/3S2)) 90% RH or less (non-condensing) (Without circuit board coating)								
	Coolant (*10)		Copper (C1220) is used for the inverter internal piping. Select an appropriate cooling system and a coolant to prevent corrosion.								
	Coolant Temperature		1°C to 40°C (non-freezing)								
	Coolant Flow Rate (*11)		2.9 to 3.7 L/min *For the FR-A840-03250(110K) and FR-A840-03610(132K); 6.0 to 7.5 L/min *For the FR-A840-04320(160K) to FR-A840-06830(280K), FR-A870-03590(280K), and FR-A870-04560(355K)								
	Maximum Permissible Pressure		300 kPa								
	Storage Temperature		-20°C to +65°C (*12)								
	Atmosphere		Indoors (without corrosive gas, flammable gas, oil mist, dust and dirt, etc.)								
	Altitude		2000 m or less (For the installation at an altitude above 1000 m, consider a 3% reduction in the rated current per 500 m increase in altitude.)								
	Vibration		2.9 m/s² or less at 10 to 55 Hz (directions of X, Y, Z axes)								

Notes:

1. The capacity is the maximum capacity applicable to each voltage.
2. The rated output capacity indicated assumes that the output voltage is 440 V for the FR-A840-LC and 690 V for the FR-A870-LC.
3. The % value of the overload current rating indicated is the ratio of the overload current to the inverter's rated output current. For repeated duty, allow time for the inverter and motor to return to or below the temperatures under 100% load.
4. The maximum output voltage does not exceed the power supply voltage. The maximum output voltage can be changed within the setting range. However, the maximum point of the voltage waveform at the inverter output side is the power supply voltage multiplied by about 2.
5. The rated input current indicates a value at a rated output voltage. The impedance at the power supply side (including those of the input reactor and cables) affects the rated input current.
6. The power supply capacity is the value when at the rated output current. It varies by the impedance at the power supply side (including those of the input reactor and cables).
7. For the power voltage exceeding 480 V, set Pr.977 Input voltage mode selection.
8. FR-DU08: IP40 (except for the PU connector section)
9. Condensation may occur depending on the humidity and the coolant temperature. Adjust the humidity and the coolant temperature to prevent condensation.
10. For the composition of the coolant, refer to the Instruction Manual of the inverter.
11. Under normal conditions, keep the flow rate between 3.1 and 3.5 L/min for the FR-A840-03610(132K) or lower, and between 6.5 and 7.0 L/min for the FR-A840-04810(160K) or higher and the FR-A870-03590(280K) or higher. For the details of coolant selection, please contact your sales representative.
12. Temperature applicable for a short time, e.g. in transit. To store the inverter after the coolant has passed through the pipes, fill the pipes with coolant sufficiently enough that it contains antifreezing agent to prevent corrosion. Or fill the pipes with nitrogen gas after the inside of the pipes is fully dried. If any moisture remains inside the pipes, it may react with oxygen in the air to form corrosion.

FR-A842-P

Using all new technology to seamlessly synchronize two or three sets of inverter sections, the FR-A842-P parallel configuration is a unique solution for controlling large capacity motors up to 1800 horsepower. The FR-A842-P inverter sections are fed by converters in a common DC bus configuration (FR-CC2-P) and utilize balance reactors (FR-POL-H) to slow the rate of current rise on the output side of the drives. Ideal for large pumping systems and artificial lift applications, the FR-A842-P parallel configuration can offer high levels of motor control and performance while being a cost-effective alternative to many medium voltage systems.



Converter Unit Capacity

The capacity of all converter units must be the same series in the system. Converter unit capacities cannot be mixed. The table below shows the converter units compatible with the inverters according to the connected motor capacity.

Motor Capacity (kW) (*1)	Number of Converter Units	Converter Unit FR-CC2-	Inverter					
			LD (Light Duty)			ND (Normal Duty, Initial Value)		
			Model A842-__-P		Rated Current (A)	Model A842-__-P		Rated Current (A)
630	2	**H400K-60P**	–	–	–	400K	09620	1232
710	2	**H450K-60P**	400K	09620	1386	450K	10940	1386
800	2	**H500K-60P**	450K	10940	1539	500K	12120	1539
900	2	**H560K-60P**	500K	12120	1750	–	–	–
945	3	**H400K-60P**	–	–	–	400K	09620	1848
1065	3	**H450K-60P**	400K	09620	2078	450K	10940	2078
1200	3	**H500K-60P**	450K	10940	2309	500K	12120	2309
1350	3	**H560K-60P**	500K	12120	2626	–	–	–

Note 1: The applicable motor capacity indicated is the maximum capacity applicable for use of a 4-pole motor.

Model FR-A842-			Two in Parallel			Three in Parallel		
			400K	450K	500K	400K	450K	500K
			09620-1-U6P	10940-1-U6P	12120-1-U6P	09620-1-U6P	10940-1-U6P	12120-1-U6P
Applicable Motor Capacity (kW)		LD	**710**	**800**	**900**	**1065**	**1200**	**1350**
		ND (Initial Setting)	**630**	**710**	**800**	**945**	**1065**	**1200**
Output	Rated Capacity (kVA) (*1)	LD	1056	1173	1334	1584	1759	2002
		ND (Initial Setting)	939	1056	1173	1409	1584	1759
	Rated Current (A) (*2)	LD	1386	1539	1750	2078	2309	2626
		ND (Initial Setting)	1232	1386	1539	1848	2078	2309
	Overload Current Rating (*3)	LD	120% 60 s, 150% 3 s (inverse-time characteristics) at surrounding air temperature of 50°C					
		ND (Initial Setting)	150% 60 s, 200% 3 s (inverse-time characteristics) at surrounding air temperature of 50°C					
	Rated Voltage (*4)		Three-phase 380 to 500 V					
	Regenerative Braking Torque (*5) (When the Converter Unit is Used)	Maximum Brake Torque	10% torque/continuous					
Input Power	DC Power Supply Voltage		430 to 780 VDC					
	Control Power Supply Auxiliary Input		Single phase 380 to 500 V 50/60 Hz (*6)					
	Permissible Control Power Supply Auxiliary Input Fluctuation		Frequency ±5%, voltage ±10%					
Protective Structure (IEC 60529) (*7)			Open type (IP00)					
Cooling System			Forced air cooling					
Approx. Weight (kg) (*8)			486	486	486	729	729	729

Notes:
1. The rated output capacity indicated assumes that the output voltage is 440 V.
2. Total output current of the inverters operated in parallel.
3. The % value of the overload current rating indicated is the ratio of the overload current to the inverter's rated output current. For repeated duty, allow time for the inverter and motor to return to or below the temperatures under 100% load.
4. The maximum output voltage does not exceed the power supply voltage. The maximum output voltage can be changed within the setting range. However, the maximum point of the voltage waveform at the inverter output side is the power supply voltage multiplied by about 2.
5. ND rating reference value.
6. For the power voltage exceeding 480 V, set Pr.977 Input voltage mode selection. (For details, refer to the FR-A800 Instruction Manual (Detailed).
7. FR-DU08: IP40 (except for the PU connector section).
8. Total mass of the inverters operated in parallel.

FR-A842-P (2-inverters in a parallel system configuration example)

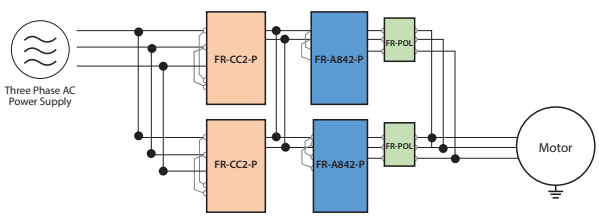

FR-A842-P (3-inverters in a parallel system configuration example)

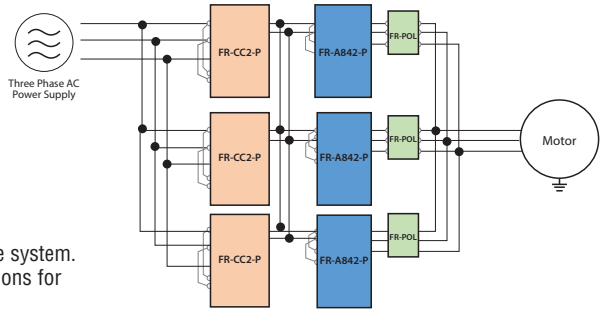

In parallel configurations, the capacity of the drives must be the same series in the system. Drive capacities cannot be mixed. The table at the right shows the rated specifications for operating two or three inverters in parallel.

FR-A802-P (A842-P) Terminal Connection Diagram

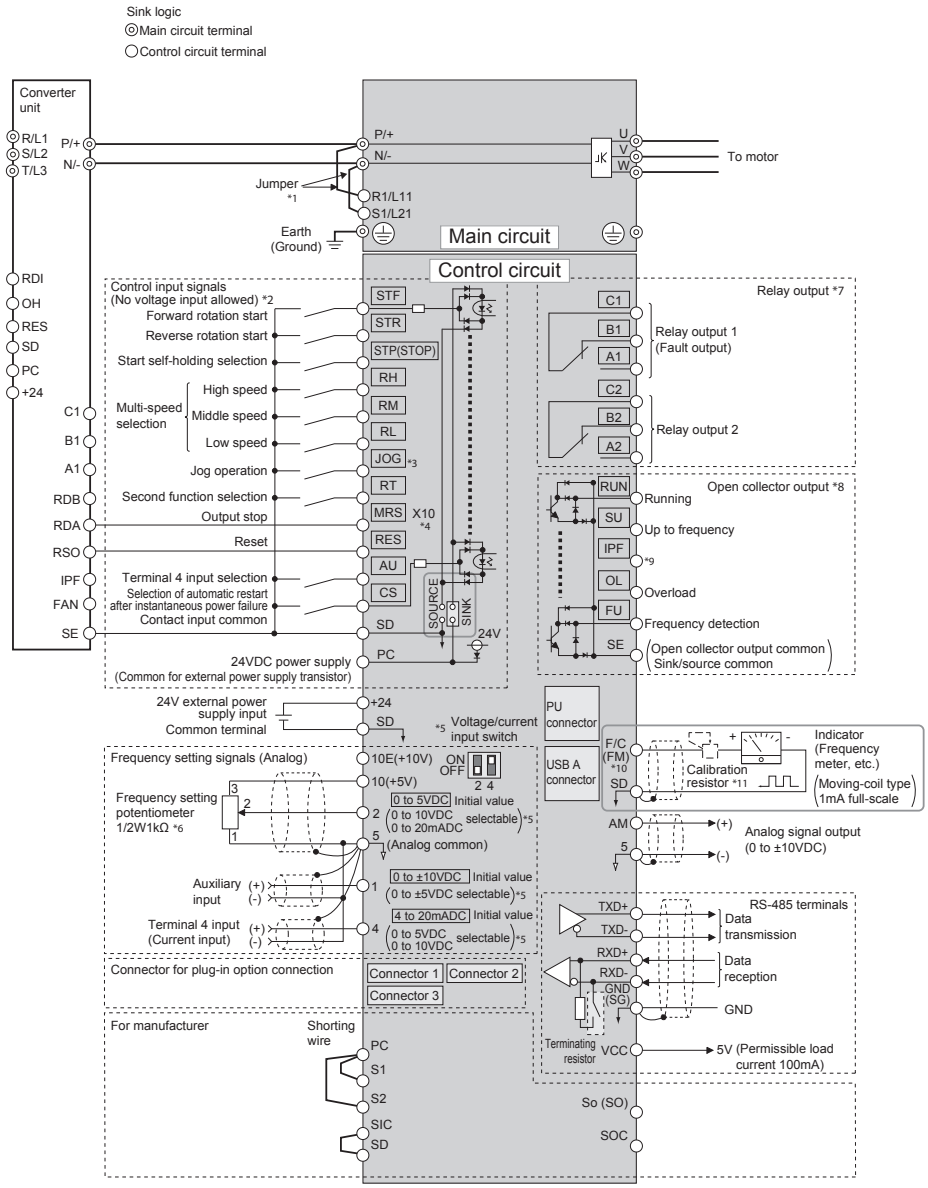

Notes:

1. For the FR-A820-03800(75K) or higher, the FR-A840-02160(75K) or higher, and when a 75 kW or higher motor is used, always connect a DC reactor (FR-HEL), which is Terminals R1/L11 and S1/L21 are connected to terminals P/+ and N/- with a jumper respectively. When using separate power supply for the control circuit, remove the jumpers from R1/L11 and S1/L21.
2. The function of these terminals can be changed with the input terminal assignment (Pr.178 to Pr.189).
3. Terminal JOG is also used as the pulse train input terminal. Use Pr.291 to choose JOG or pulse.
4. The X10 signal (NC contact input specification) is assigned to terminal MRS in the initial setting. Set Pr.599 = "0" to change the input specification of the X10 signal to NO contact.
5. Terminal input specifications can be changed by analog input specification switchover (Pr.73, Pr.267). To input a voltage (0 to 5 V/0 to 10 V), set the voltage/current input switch OFF. To input a current (4 to 20 mA), set the voltage/current input switch ON. Terminals 10 and 2 are also used as a PTC input terminal. (Pr.561)
6. It is recommended to use 2 W 1 kΩ when the frequency setting signal is changed frequently.
7. The function of these terminals can be changed with the output terminal assignment (Pr.195, Pr.196).
8. The function of these terminals can be changed with the output terminal assignment (Pr.190 to Pr.194).
9. No function is assigned in the initial setting. Use Pr.192 for function assignment.
10. Terminal FM can be used to output pulse trains as open collector output by setting Pr.291.
11. Not required when calibrating the scale with the operation panel.

Inverter		Converter Unit	Balance Reactor	Number of Inverters Connected in Parallel	Capacity of the System	
Model Number	Multi Rating				Motor Capacity (kW)	Output Current (A)
A842-09620-1-U6P	ND	FR-CC2-H400K-P	FR-POL-H400K	2	630	1232
				3	945	1848
	LD	FR-CC2-H450K-P	FR-POL-H500K	2	710	1386
				3	1065	2078
A842-10940-1-U6P	ND	FR-CC2-H450K-P		2	710	1386
				3	1065	2078
	LD	FR-CC2-H500K-P		2	800	1539
				3	1200	2309
A842-12120-1-U6P	ND	FR-CC2-H500K-P		2	800	1539
				3	1200	2309
	LD	FR-CC2-H560K-P		2	900	1750
				3	1350	2626

FR-A846 – NEMA 12 Version of FR-A800

FR-A846 takes the performance and high specification of the regular FR-A840 VFD and packages it in a robust NEMA 12 (IP55) enclosure that makes it as simple to install as a stand-alone VFD in dirty or damp environments. Drives are available in sizes from 1 to 200HP (250HP for pumping applications).

- Simple to install close to the motor – reduces stress on windings and bearings
- Supplied complete with DC link chokes for improved power quality
- EMC filter built-in to ensure low levels of radio noise
- Special waterproof keypad included for easy set-up in the field
- Compatible with all FR-A800 option cards
- Robust gland plate design for easy cable connection



Model Number	Amps for Duty		HP for Duty		Frame Size (H x W x D) mm	Protective Rating	Stocked Item
	LD	ND	LD	ND			
A846-00023-1-60C3	2.1	1.5	1	0.5	A (508 x 238 x 271)	NEMA 12, UL-12, IP55	-
A846-00038-1-60C3	3	2.5	2	1			S
A846-00052-1-60C3	4.8	4	3	2			-
A846-00083-1-60C3	7.6	6	5	3			-
A846-00126-1-60C3	11.5	9	7.5	5			S
A846-00170-1-60C3	16	12	10	7.5			-
A846-00250-1-60C3	23	17	15	10	B (650 x 238 x 285)		S
A846-00310-1-60C3	29	23	20	15			-
A846-00380-1-60C3	35	31	25	20			S
A846-00470-1-60C3	43	38	30	25			S
A846-00620-1-60C3	57	44	40	30	C (790 x 345 x 357)		-
A846-00770-1-60C3	70	57	50	40			-
A846-00930-1-60C3	85	71	60	50			-
A846-01160-1-60C3	106	86	75	60			-
A846-01800-1-60C3	144	110	100	75	D (1360 x 420 x 456.6)		-
A846-02160-1-60C3	180	144	150	100			-
A846-02600-1-60C3	216	180	150	150			-
A846-03250-1-60C3	260	216	200	150	E (1510 x 420 x 456.6)		-
A846-03610-1-60C3	325	260	250	200			-

General Options

General Accessories for all VFDs

Motor HP	Input / Output Reactors (*1)		Amps (Rated)	Motor FLA (NEC)	DC Link Choke (*2)	Input Circuit Breaker (UL489)	Input Contactor	Passive Harmonic Filter (*3)	Sine Wave Output Filter (*3)
	3%	5%							
208-230V									
0.25	MRL-00204	MRL-00201	2	1.3	DCA000204	NF50-SVFU3P5A	S-T10		-
0.50	MRL-00402	MRL-00403	4	2.2	DCA000402	NF50-SVFU3P5A	S-T10	-	-
1	MRL-00802	MRL-00803	8	4.2	DCA000902	NF50-SVFU3P10A	S-T10	-	-
2	MRL-00801	MRL-00802	8	6.8	DCA000802	NF50-SVFU3P15A	S-T10	-	-
3	MRL-01201	MRL-01202	12	9.6	DCA001802	NF50-SVFU3P20A	S-T10	-	-
5	MRL-01801	MRL-01802	18	15.2	DCA001802	NF50-SVFU3P30A	S-T20	-	-
7.5	MRL-02501	MRL-02502	25	22	DCA003201	NF50-SVFU3P50A	S-T20	-	-
10	MRL-03501	MRL-03502	35	28	DCA004002	NF125-SVU3P60A	S-T25	-	-
15	MRL-04501	MRL-04502	45	42	DCA005001	NF125-SVU3P75A	S-T35	-	-
20	MRL-05501	MRL-05502	55	54	DCA008002	NF125-SVU3P125A	S-T50	-	-
25	MRL-08001	MRL-08002	80	68	DCA011003	NF250-SVU3P150A	S-T65	-	-
30	MRL-10001	MRL-10002	100	80	DCA011003	NF250-SVU3P175A	S-T80	-	-
40	MRL-13001	MRL-13002	130	104	DCA012502	NF250-SVU3P225A	S-T100	-	-
50	MRL-16001	MRL-16002	160	130	DCA020002	NF250-SVU3P250A	S-N150	-	-
60	MRL-16001	MRL-16002	160	154	DCA020002	-	S-N180	-	-
75	MRL-20001B14	MRL-20002B14	200	192	240RB002	-	S-N200	-	-
100	MRL-25001B14	MRL-25002B14	250	248	STANDARD	-	S-N300	-	-
125	MRL-32001B14	MRL-32002B14	320	312	STANDARD	-	S-N300	-	-
150	MRL-40001B14	MRL-40002B14	400	360	STANDARD	-	S-N300	-	-
200	MRL-50001B14	MRL-50002	500	480	STANDARD	-	S-N400	-	-
460-480V									
0.25	MRL-00103	MRL-00102	1	0.7	DCA000204	NF100-HRU3P5A	S-T10	-	-
0.50	MRL-00104	MRL-00103	1	1.1	DCA000204	NF100-HRU3P5A	S-T10	-	SWGM0002D
1	MRL-00201	MRL-00202	2	2.1	DCA000402	NF100-HRU3P10A	S-T10	-	SWGM0003D
2	MRL-00402	MRL-00403	4	3.4	DCA000903	NF100-HRU3P10A	S-T10	MAPP0006D	SWGM0005D
3	MRL-00803	MRL-00804	8	4.8	DCA000903	NF125-SVU3P20A	S-T10	MAPP0008D	SWGM0009D
5	MRL-00802	MRL-00803	8	7.6	DCA001804	NF125-SVU3P30A	S-T20	MAPP0011D	SWGM0012D
7.5	MRL-01202	MRL-01203	12	11	DCA001803	NF125-SVU3P30A	S-T20	MAPP0014D	SWGM0017D
10	MRL-01802	MRL-01803	18	14	DCA002503	NF125-SVU3P50A	S-T20	MAPP0021D	SWGM0022D
15	MRL-02502	MRL-02503	25	21	DCA003202	NF125-SVU3P60A	S-T25	MAPP0027D	SWGM0027D
20	MRL-03502	MRL-03503	35	27	DCA004003	NF125-SVU3P75A	S-T25	MAPP0034D	SWGM0035D
25	MRL-03502	MRL-03503	35	34	DCA005004	NF125-SVU3P100A	S-T35	MAPP0044D	SWGM0045D
30	MRL-04502	MRL-04503	45	40	DCA008005	NF125-SVU3P125A	S-T50	MAPP0052D	SWGM0055D
40	MRL-05502	MRL-05503	55	52	DCA008005	NF250-SVU3P150A	S-T65	MAPP0066D	SWGM0065D
50	MRL-08002	MRL-08003	80	65	DCA009202	NF250-SVU3P175A	S-T80	MAPP0083D	SWGM0080D
60	MRL-08002	MRL-08003	80	77	125RB003	NF250-SVU3P200A	S-T80	MAPP0103D	SWGM0110D
75	MRL-10002	MRL-10003	100	96	STANDARD	NF250-SVU3P225A	S-T100	MAPP0128D	SWGM0130D
100	MRL-13002	MRL-13003	130	124	STANDARD	NF250-SVU3P225A	S-N150	MAPP0165D	SWGM0160D
125	MRL-16002	MRL-16003	160	156	STANDARD	NF250-SVU3P225A	S-N180	MAPP0208D	SWGM0200D
150	MRL-20002B14	MRL-20003B14	200	180	STANDARD	-	S-N220	MAPP0240D	SWGM0250D
200	MRL-25002B14	MRL-25003B14	250	240	STANDARD	-	S-N300	MAPP0320D	SWGM0305D
250	MRL-32002B14	MRL-32003B14	320	302	STANDARD	-	S-N300	MAPP0403D	SWGM0365D
300	MRL-40002B14	MRL-40003B14	400	361	STANDARD	-	S-N400	MAPP0482D	SWGM0415D
350	MRL-50002	MRL-50003	500	414	STANDARD	-	S-N600	MAPP0482D	SWGM0515D
400	MRL-50002	MRL-50002	500	477	STANDARD	-	S-N600	MAPP0636D	SWGM0515D
450	MRL-60002	MRL-60003	600	515	STANDARD	-	S-N600	MAPP0636D	SWGM0600D
500	MRL-60002	MRL-60003	600	590	STANDARD	-	S-N600	MAPP0786D	SWGM0720D
600	MRL-75002	MRL-75003	750	708	STANDARD	-	S-N800	MAPP0786D	SWGM0720D
700	MRL-85002B14	MRL-85003B14	850	840	STANDARD	-	-	MAPP0850D	-
800	MRL-100002B14	MRL-100003B14	1000	960	STANDARD	-	-	MAPP1000D	-
900	MRL-120002B14	MRL-120003B14	1200	1050	STANDARD	-	-	-	-
1000	MRL-120002B14	MRL-120003B14	1200	1160	STANDARD	-	-	-	-

Notes:
1. Model numbers for input reactors are for OPEN types. Change the second from last digit to a '1' for NEMA 1 types (e.g. MRL-00201 becomes MRL-00211)
2. DC Link chokes are OPEN type and at least 3% inductance.
3. Model numbers for passive and sine wave filters are for OPEN types. Change the 4th character to a 'G' for NEMA 2 enclosures (e.g. MAPP0006D becomes MAPG0006D, SWGM0009D becomes SWGG0009D)

General Accessories for all VFDs

Motor HP	Input / Output Reactors (*1)		Amps (Rated)	Motor FLA (NEC)	DC Link Choke (*2)	Input Circuit Breaker (UL489)	Input Contactor	Passive Harmonic Filter (*3)	Sine Wave Output Filter (*3)
	3%	5%							
600V									
1	MRL-00202	MRL-00203	2	1.7	DCA000204	-	S-T10	-	-
2	MRL-00403	MRL-00404	4	2.7	-	-	-	-	-
3	MRL-00402	MRL-00404	4	3.9	DCA000904	NF125-HVU3P15A	S-T20	-	-
5	MRL-00803	MRL-00804	8	6.1	DCA000904	NF125-HVU3P20A	S-T20	-	-
7.5	MRL-01202	MRL-01203	12	9	-	-	-	-	-
10	MRL-01202	MRL-01203	12	11	DCA001803	NF125-HVU3P30A	S-T20	-	-
15	MRL-01802	MRL-01803	18	17	-	-	-	-	-
20	MRL-02502	MRL-02503	25	22	DCA003203	NF125-HVU3P60A	S-T25	-	-
25	MRL-02502	MRL-02503	25	27	-	-		-	-
30	MRL-03502	MRL-03503	35	32	DCA004003	NF125-HVU3P100A	S-T25	-	-
40	MRL-04502	MRL-04503	45	41	-	-	-	-	-
50	MRL-05502	MRL-05503	55	52	DCA008005	NF125-HVU3P125A	S-T50	-	-
60	MRL-08002	MRL-08003	80	62	-	-	-	-	-
75	MRL-08002	MRL-08003	80	77	DCA009203	NF250-HVU3P175A	S-T65	-	-
100	MRL-10002	MRL-10003	100	99	STANDARD	NF250-HVU3P175A	S-T65	-	-
125	MRL-13002	MRL-13003	130	125	STANDARD	NF250-HVU3P225A	S-T80	-	-
150	MRL-16002	MRL-16003	160	144	STANDARD	NF250-HVU3P250A	S-N125	-	-
200	MRL-20002B14	MRL-20003B14	200	192	STANDARD	NF4SWU3350BB	S-N150	-	-
250	MRL-25002B14	MRL-25003B14	250	242	STANDARD	-	-	-	-
300	MRL-32002B14	MRL-32003B14	320	289	STANDARD	NF4SWU3400BB	S-N180	-	-
350	MRL-40002B14	MRL-40003B14	400	336	STANDARD	NF6SWU3600BB	S-N300	-	-
400	MRL-40002B14	MRL-40003B14	400	382	STANDARD	-	-	-	-
450	MRL-50002	MRL-50003	500	412	STANDARD	NF6SWU3600BB	S-N400	-	-
500	MRL-50002	MRL-50003	500	472	STANDARD	-	-	-	-
550	MRL-60002	MRL-60003	-	-	STANDARD	-	S-N600	-	-
600	MRL-60002	MRL-60003	600	576	STANDARD	-	-	-	-
700	MRL-75002	MRL-75003	750	672	STANDARD	-	S-N600	-	-

Notes:
1. Model numbers for input reactors are for OPEN types. Change the second from last digit to a '1' for NEMA 1 types (e.g. MRL-00201 becomes MRL-00211)
2. DC Link chokes are OPEN type and at least 3% inductance.
3. Model numbers for passive and sine wave filters are for OPEN types. Change the 4th character to a 'G' for NEMA 2 enclosures (e.g. MAPP0006D becomes MAPG0006D, SWGM0009D becomes SWGG0009D)

Line / Load Reactor Electrical Data

Model Number	Watts Loss	Wire Range (AWG)	Terminal Torque (in / lbs)	Ind. mH	Fund Amps	Max Amps
MRL-00201	8	22 14	4.5	12	2	3
MRL-00202	12	22 14	4.5	20	2	3
MRL-00203	16	22 14	4.5	32	2	3
MRL-00204	11	22 14	4.5	6	2	3
MRL-00401	15	22 14	4.5	3	4	6
MRL-00402	20	22 14	4.5	6.5	4	6
MRL-00403	20	22 14	4.5	9	4	6
MRL-00404	21	22 14	4.5	12	4	6
MRL-00801	20	22 14	4.5	1.5	8	12
MRL-00802	29	22 14	4.5	3	8	12
MRL-00803	26	22 14	4.5	5	8	12
MRL-00804	28	22 14	4.5	7.5	8	12
MRL-01201	26	22 5	16	1.25	12	18
MRL-01202	31	22 5	16	2.5	12	18
MRL-01203	41	22 5	16	4.2	12	18
MRL-01801	36	22 5	16	0.8	18	27
MRL-01802	43	22 5	16	1.5	18	27
MRL-01803	43	22 5	16	2.5	18	27
MRL-02501	48	22 5	16	0.5	25	37.5
MRL-02502	52	22 5	16	1.2	25	37.5
MRL-02503	61	22 5	16	1.8	25	37.5
MRL-03501	49	22 5	16	0.4	35	52.5
MRL-03502	54	22 5	16	0.8	35	52.5
MRL-03503	54	18 4	20	1.2	35	52.5
MRL-04501	54	18 4	20	0.3	45	67.5
MRL-04502	62	18 4	20	0.7	45	67.5
MRL-04503	65	18 4	20	1.2	45	67.5
MRL-05501	64	6 0	6-4(45) & 2-0(50)	0.25	55	82.5
MRL-05502	67	6 0	6-4(45) & 2-0(50)	0.5	55	82.5
MRL-05503	71	6 0	6-4(45) & 2-0(50)	0.85	55	82.5
MRL-08001	82	6 0	6-4(45) & 2-0(50)	0.2	80	120
MRL-08002	86	6 0	6-4(45) & 2-0(50)	0.4	80	120
MRL-08003	96	6 0	6-4(45) & 2-0(50)	0.7	80	120
MRL-10001	94	6 0	6-4(45) & 2-0(50)	0.15	100	150
MRL-10002	84	6 0	6-4(45) & 2-0(50)	0.3	100	150
MRL-10003	108	6 0	6-4(45) & 2-0(50)	0.45	100	150
MRL-13001	108	2 0000	150	0.1	130	195
MRL-13002	180	2 0000	150	0.2	130	195
MRL-13003	128	2 0000	150	0.3	130	195
MRL-16001	116	2 0000	150	0.075	160	240
MRL-16002	149	2 0000	150	0.15	160	240
MRL-16003	138	2 0000	150	0.23	160	240
MRL-20001B14	124	Copper tab	Not Applicable	0.055	200	300
MRL-20002B14	168	Copper tab	Not Applicable	0.11	200	300
MRL-20003B14	146	Copper tab	Not Applicable	0.185	200	300
MRL-25001B14	154	Copper tab	Not Applicable	0.045	250	375
MRL-25002B14	231	Copper tab	Not Applicable	0.09	250	375
MRL-25003B14	219	Copper tab	Not Applicable	0.15	250	375
MRL-32001B14	224	Copper tab	Not Applicable	0.04	320	480
MRL-32002B14	264	Copper tab	Not Applicable	0.075	320	480
MRL-32003B14	351	Copper tab	Not Applicable	0.125	320	480
MRL-40001B14	231	Copper tab	Not Applicable	0.03	400	600
MRL-40002B14	333	Copper tab	Not Applicable	0.06	400	600
MRL-40003B14	293	Copper tab	Not Applicable	0.105	400	600
MRL-50001	266	Copper tab	Not Applicable	0.025	500	750
MRL-50002	340	Copper tab	Not Applicable	0.05	500	750
MRL-50003	422	Copper tab	Not Applicable	0.085	500	750
MRL-60001	307	Copper tab	Not Applicable	0.02	600	900
MRL-60002	414	Copper tab	Not Applicable	0.04	600	900
MRL-60003	406	Copper tab	Not Applicable	0.065	600	900
MRL-75001	427	Copper tab	Not Applicable	0.015	750	1125
MRL-75002	630	Copper tab	Not Applicable	0.029	750	1125
MRL-75003	552	Copper tab	Not Applicable	0.048	750	1125
MRL-85001	798	Copper tab	Not Applicable	0.015	850	1063
MRL-85002	930	Copper tab	Not Applicable	0.027	850	1063
MRL-85003	1133	Copper tab	Not Applicable	0.042	850	1063
MRL-90001	860	Copper tab	Not Applicable	0.013	900	1125
MRL-90002	1020	Copper tab	Not Applicable	0.025	900	1125
MRL-90003	1365	Copper tab	Not Applicable	0.04	900	1125
MRL-100001	940	Copper tab	Not Applicable	0.011	1000	1250
MRL-100002	1090	Copper tab	Not Applicable	0.022	1000	1250
MRL-100003	1500	Copper tab	Not Applicable	0.038	1000	1250

For additional information visit http://www.mtecorp.com/lineload.html

DC Choke Electrical Data

Model No.	DC Amps	mH	Watts	Lug Size	Torque	Unit Weight (lbs)
DCA000204	2	50	5	22-14	4.5	2
DCA000402	4	12	5	22-14	4.5	2
DCA000403	4	15	6	22-14	4.5	2
DCA000404	4	25	9	18-4	20	4
DCA000902	9	3.22	7	22-14	4.5	2
DCA000903	9	7.5	11	18-4	20	4
DCA000904	9	11.5	16	18-4	20	7
DCA001201	12	1	5	22-14	4.5	1
DCA001202	12	1	7	18-4	20	2
DCA001203	12	4	11	18-4	20	4
DCA001204	12	6	14	18-4	20	7
DCA001801	18	0.65	5	18-4	20	2
DCA001802	18	1.375	9	18-4	20	4
DCA001803	18	2.75	16	18-4	20	7
DCA001804	18	3.75	17	18-4	20	8
DCA001805	18	6	20	18-4	20	13
DCA002503	25	1.275	13	18-4	20	7
DCA002504	25	1.75	13	18-4	20	5
DCA002505	25	4	16	18-4	20	13
DCA003201	32	0.85	11	18-4	20	5
DCA003202	32	1.62	14	18-4	20	10
DCA003203	32	2.68	21	18-4	20	14
DCA004001	40	0.5	14	18-4	20	5
DCA004002	40	0.75	15	18-4	20	7
DCA004003	40	1	17	18-4	20	8
DCA004004	40	2	29	18-4	20	21
DCA005001	50	0.625	18	18-4	20	8
DCA005003	50	1.35	21	18-4	20	15
DCA005004	50	2	30	6-0	6-4(45) & 2-0	25
DCA006201	62	0.32	17	6-0	6-4(45) & 2-0	8
DCA006202	62	0.61	20	6-0	6-4(45) & 2-0	14
DCA008002	80	0.4	25	6-0	6-4(45) & 2-0(50)	14
DCA008005	80	1.25	25	6-0	6-4(45) & 2-0(50)	35
DCA009201	92	0.2	19	6-0	6-4(45) & 2-0(50)	10
DCA009202	92	0.6	34	6-0	6-4(45) & 2-0(50)	23
DCA009203	92	1	48	6-0	6-4(45) & 2-0(50)	32
DCA011002	110	0.3	38	6-0	6-4(45) & 2-0(50)	22
DCA011003	110	0.45	45	6-0	6-4(45) & 2-0(50)	22
DCA012502	125	0.22	27	6-0	6-4(45) & 2-0(50)	23
DCA015002	150	0.22	36	2-0000	150	23
DCA015004	150	0.65	66	2-0000	150	52
DCA020002	200	0.21	50	2-0000	150	39
240RB002	240	0.25	102	00-500 mcm	375	67

For additional information, visit http://www.mtecorp.com/dclink.html

FR-XC Series Multifunction Regeneration Converters

Model Number				FR-XC-(H)_K (*1)									FR-XC-(H)_K-PWM					
Class (V)				200V		400V							200V		400V			
Stocked Item				S	S	S	S	S	S	S	S	S	S	S	S	S	S	S
Harmonic Suppression				37	55	7.5	11	15	22	30	37	55	37	55	18.5	22	37	55
50°C Rating	Applicable Inverter Capacity (kW)	Disabled		37	55	7.5	11	15	22	30	37	55	37	55	22	30	37	55
		Enabled		37	55	-	-	-	18.5	22	37	55	37	55	18.5	22	37	55
	Applicable Motor Current (A)	Disabled		145	215	17	23	31	44	57	71	110	145	215	44	57	71	110
		Enabled		145	215	-	-	-	38	44	71	110	145	215	38	44	71	110
	Rated Input Current (A)	Disabled	Power Driving	151	223	18	25	34	49	65	80	118	151	223	49	65	80	118
			Regen. Driving	125	186	14	20	27	39	54	66	98	125	186	39	54	66	98
		Enabled	Power Driving/ Regenerative Driving	134	198	-	-	-	37	43	71	104	134	198	37	43	71	104
	Overload Current Rating			100% continuous / 150% 60 s														
	Power Supply Capacity (kVA) (*2)	Disabled		66	100	17	20	28	41	52	66	100	66	100	41	52	66	100
		Enabled		57	84	-	-	-	32	37	60	88	57	84	32	37	60	88
40°C Rating	Applicable Inverter Capacity (kW)	Disabled		37	55	7.5	11	15	22	30	37	55	37	55	22	30	37	55
		Enabled		37	55	-	-	-	18.5	22	37	55	37	55	18.5	22	37	55
	Applicable Motor Current (A)	Disabled		160	236	18	25	34	48	63	78	120	160	236	48	63	78	120
		Enabled		160	236	-	-	-	42	48	78	120	160	236	42	48	78	120
	Rated Input Current (A)	Disabled	Power Driving	166	245	20	27	37	53	72	88	129	166	245	53	72	88	129
			Regen. Driving	138	204	15	21	29	42	59	72	107	138	204	42	59	72	107
		Enabled	Power Driving / Regenerative Driving	147	217	-	-	-	40	47	78	113	147	217	40	47	78	113
	Overload Current Rating			100% continuous / 150% 60 s														
	Power Supply Capacity (kVA) (*2)	Disabled		73	110	19	22	30	44	58	73	110	73	110	44	58	73	110
		Enabled		62	92	-	-	-	34	40	66	96	62	92	34	40	66	96
50°C Rating	Potential Regenerative Capacity (kW) (*6)			30	45	5.5	7.5	11	18.5	22	30	45	30	45	18.5	22	30	45
	Rated Current (A) (Regenerative Driving)			102	152	10	14	20	33	39	54	80	102	152	33	39	54	80
	Overload Current Rating			100% continuous / 150% 60 s														
40°C Rating	Potential Regenerative Capacity (kW) (*6)			30	45	5.5	7.5	11	18.5	22	30	45	30	45	18.5	22	30	45
	Rated Current (A) (Regenerative Driving)			112	167	11	15	21	36	42	59	88	112	167	36	42	59	88
	Overload Current Rating			100% continuous / 150% 60 s														
Protective Structure (IEC 60529) (*3)				Open type (IP00)														
Cooling System				Forced air cooling														
Number of Connectable Inverters				10 (*4)														
Approx. Weight (kg) (*5)				28	38	5	5	6	10.5	10.5	28	28	28	38	10.5	10.5	28	28

Notes:
1. The harmonic suppression function is not pre-enabled in this model.
2. Selection example for 220 V, 440 V power supply voltage.
3. IP00 for the FR-XCL.
4. One inverter for operation in the power regeneration mode.
5. Mass of the FR-XC alone.
6. Maximum capacity of regenerative power generated from the Mitsubishi Electric 4-pole standard motor in each axis.



FR-XCCU



FR-XCL



FR-XCB



FR-XC

Combination matrix of FR-XCB and FR-XC(-PWM)

Dedicated Box-Type Reactor	Multifunction Regeneration Converter	
FR-XCL-[ ]	FR-XC-[ ]	FR-XC-[ ]-PWM (*1)
37K	37K	37K
55K	55K	55K
H18.5K	H22K	H18.5K
H22K	H30K	H22K
H37K	H37K	H37K
H55K	H55K	H55K

Combination matrix for the IP20 compatible attachment

IP20 Compatible Attachment	Multifunction Regeneration Converter
FR-XCCU[ ]	FR-XC-[ ](-PWM)
01	37K
	H55K
02	55K
03	H37K

Combination matrix of FR-XCL and FR-XC(-PWM)

Dedicated Stand-Alone Reactor	Multifunction Regeneration Converter	
FR-XCL-[ ]	FR-XC-[ ]	FR-XC-[ ]-PWM (*1)
37K	37K	37K
55K	55K	55K
H7.5K	H7.5K	-
H11K	H11K	-
H15K	H15K	-
H22K	H22K	H18.5K
H30K	H30K	H22K
H37K	H37K	H37K
H55K	H55K	H55K

The harmonic suppression function is not pre-enabled in this model. To use the converter with the FR-XCB and the FR-XC, change the "9999" setting of Pr.416 Control method selection to "1" (harmonic suppression enabled).

EM-A Sensorless Servo Motor for FR-800 Series VFD 200V

Model Number (Without Brake)	Description
EM-AMF0.1KW	0.1KW 3000RPM 4P 200V Motor
EM-AMF0.2KW	0.2KW 3000RPM 4P 200V Motor
EM-AMF0.4KW	0.4KW 3000RPM 4P 200V Motor
EM-AMF0.75KW	0.75KW 3000RPM 4P 200V Motor
EM-AMF1.5KW	1.5KW 3000RPM 6P 200V Motor
EM-AMF2.2KW	2.2KW 3000RPM 6P 200V Motor
EM-AMF3.7KW	3.7KW 3000RPM 6P 200V Motor
EM-AMF5.5KW	5.5KW 3000RPM 6P 200V Motor
EM-AMF7.5KW	7.5KW 3000RPM 6P 200V Motor

Model Number (With Brake)	Description
EM-AMFB0.1KW	0.1KW 3000RPM 4P 200V Brake Motor
EM-AMFB0.2KW	0.2KW 3000RPM 4P 200V Brake Motor
EM-AMFB0.4KW	0.4KW 3000RPM 4P 200V Brake Motor
EM-AMFB0.75KW	0.75KW 3000RPM 4P 200V Brake Motor
EM-AMFB1.5KW	1.5KW 3000RPM 6P 200V Brake Motor
EM-AMFB2.2KW	2.2KW 3000RPM 6P 200V Brake Motor
EM-AMFB3.7KW	3.7KW 3000RPM 6P 200V Brake Motor
EM-AMFB5.5KW	5.5KW 3000RPM 6P 200V Brake Motor
EM-AMFB7.5KW	7.5KW 3000RPM 6P 200V Brake Motor

Model Number (With Keyway Shaft)	Description
EM-AMFK0.1KW	0.1KW 3000RPM 4P 200V Motor (Key)
EM-AMFK0.2KW	0.2KW 3000RPM 4P 200V Motor (Key)
EM-AMFK0.4KW	0.4KW 3000RPM 4P 200V Motor (Key)
EM-AMFK0.75KW	0.75KW 3000RPM 4P 200V Motor (Key)
EM-AMFK1.5KW	1.5KW 3000RPM 6P 200V Motor (Key)
EM-AMFK2.2KW	2.2KW 3000RPM 6P 200V Motor (Key)
EM-AMFK3.7KW	3.7KW 3000RPM 6P 200V Motor (Key)
EM-AMFK5.5KW	5.5KW 3000RPM 6P 200V Motor (Key)
EM-AMFK7.5KW	7.5KW 3000RPM 6P 200V Motor (Key)

Model Number (With Brake and Keyway Shaft)	Description
EM-AMFBK0.1KW	0.1KW 3000RPM 4P 200V Brake Motor (Key)
EM-AMFBK0.2KW	0.2KW 3000RPM 4P 200V Brake Motor (Key)
EM-AMFBK0.4KW	0.4KW 3000RPM 4P 200V Brake Motor (Key)
EM-AMFBK0.75KW	0.75KW 3000RPM 4P 200V Brake Motor (Key)
EM-AMFBK1.5KW	1.5KW 3000RPM 6P 200V Brake Motor (Key)
EM-AMFBK2.2KW	2.2KW 3000RPM 6P 200V Brake Motor (Key)
EM-AMFBK3.7KW	3.7KW 3000RPM 6P 200V Brake Motor (Key)
EM-AMFBK5.5KW	5.5KW 3000RPM 6P 200V Brake Motor (Key)
EM-AMFBK7.5KW	7.5KW 3000RPM 6P 200V Brake Motor (Key)

Model Number (IP65 Rated)	Description
EM-AMFW0.1KW	0.1KW 3000RPM 4P 200V IP65 Motor
EM-AMFW0.2KW	0.2KW 3000RPM 4P 200V IP65 Motor
EM-AMFW0.4KW	0.4KW 3000RPM 4P 200V IP65 Motor
EM-AMFW0.75KW	0.75KW 3000RPM 4P 200V IP65 Motor
EM-AMFW1.5KW	1.5KW 3000RPM 6P 200V IP65 Motor
EM-AMFW2.2KW	2.2KW 3000RPM 6P 200V IP65 Motor
EM-AMFW3.7KW	3.7KW 3000RPM 6P 200V IP65 Motor
EM-AMFW5.5KW	5.5KW 3000RPM 6P 200V IP65 Motor
EM-AMFW7.5KW	7.5KW 3000RPM 6P 200V IP65 Motor

Model Number (IP65 Rated with Keyway Shaft)	Description
EM-AMFKW0.1KW	0.1KW 3000RPM 4P 200V IP65 Motor (Key)
EM-AMFKW0.2KW	0.2KW 3000RPM 4P 200V IP65 Motor (Key)
EM-AMFKW0.4KW	0.4KW 3000RPM 4P 200V IP65 Motor (Key)
EM-AMFKW0.75KW	0.75KW 3000RPM 4P 200V IP65 Motor (Key)
EM-AMFKW1.5KW	1.5KW 3000RPM 6P 200V IP65 Motor (Key)
EM-AMFKW2.2KW	2.2KW 3000RPM 6P 200V IP65 Motor (Key)
EM-AMFKW3.7KW	3.7KW 3000RPM 6P 200V IP65 Motor (Key)
EM-AMFKW5.5KW	5.5KW 3000RPM 6P 200V IP65 Motor (Key)
EM-AMFKW7.5KW	7.5KW 3000RPM 6P 200V IP65 Motor (Key)

Model Number (IP65 Rated with Brake)	Description
EM-AMFBW0.1KW	0.1KW 3000RPM 4P 200V IP65 Brake Motor
EM-AMFBW0.2KW	0.2KW 3000RPM 4P 200V IP65 Brake Motor
EM-AMFBW0.4KW	0.4KW 3000RPM 4P 200V IP65 Brake Motor
EM-AMFBW0.75KW	0.75KW 3000RPM 4P 200V IP65 Brake Motor
EM-AMFBW1.5KW	1.5KW 3000RPM 6P 200V IP65 Brake Motor
EM-AMFBW2.2KW	2.2KW 3000RPM 6P 200V IP65 Brake Motor
EM-AMFBW3.7KW	3.7KW 3000RPM 6P 200V IP65 Brake Motor
EM-AMFBW5.5KW	5.5KW 3000RPM 6P 200V IP65 Brake Motor
EM-AMFBW7.5KW	7.5KW 3000RPM 6P 200V IP65 Brake Motor

Model Number (IP65 Rated, Brake, Keyway Shaft)	Description
EM-AMFBKW0.1KW	0.1KW 3000R 4P 200V IP65 Brake Motor (Key)
EM-AMFBKW0.2KW	0.2KW 3000R 4P 200V IP65 Brake Motor (Key)
EM-AMFBKW0.4KW	0.4KW 3000R 4P 200V IP65 Brake Motor (Key)
EM-AMFBKW0.75KW	0.75KW 3000R 4P 200V IP65 Brake Motor (Key)
EM-AMFBKW1.5KW	1.5KW 3000R 6P 200V IP65 Brake Motor (Key)
EM-AMFBKW2.2KW	2.2KW 3000R 6P 200V IP65 Brake Motor (Key)
EM-AMFBKW3.7KW	3.7KW 3000R 6P 200V IP65 Brake Motor (Key)
EM-AMFBKW5.5KW	5.5KW 3000R 6P 200V IP65 Brake Motor (Key)
EM-AMFBKW7.5KW	7.5KW 3000R 6P 200V IP65 Brake Motor (Key)

EM-A Sensorless Servo Motor for FR-800 Series VFD 400V

Model Number (Without Brake)	Description
EM-AMF0.4KW-4	0.4KW 3000RPM 4P 400V Motor
EM-AMF0.75KW-4	0.75KW 3000RPM 4P 400V Motor
EM-AMF1.5KW-4	1.5KW 3000RPM 6P 400V Motor
EM-AMF2.2KW-4	2.2KW 3000RPM 6P 400V Motor
EM-AMF3.7KW-4	3.7KW 3000RPM 6P 400V Motor
EM-AMF5.5KW-4	5.5KW 3000RPM 6P 400V Motor
EM-AMF7.5KW-4	7.5KW 3000RPM 6P 400V Motor

Model Number (With Brake)	Description
EM-AMFB0.4KW-4	0.4KW 3000RPM 4P 400V Brake Motor
EM-AMFB0.75KW-4	0.75KW 3000RPM 4P 400V Brake Motor
EM-AMFB1.5KW-4	1.5KW 3000RPM 6P 400V Brake Motor
EM-AMFB2.2KW-4	2.2KW 3000RPM 6P 400V Brake Motor
EM-AMFB3.7KW-4	3.7KW 3000RPM 6P 400V Brake Motor
EM-AMFB5.5KW-4	5.5KW 3000RPM 6P 400V Brake Motor
EM-AMFB7.5KW-4	7.5KW 3000RPM 6P 400V Brake Motor

Model Number (With Keyway Shaft)	Description
EM-AMFK0.4KW-4	0.4KW 3000RPM 4P 400V Motor (Key)
EM-AMFK0.75KW-4	0.75KW 3000RPM 4P 400V Motor (Key)
EM-AMFK1.5KW-4	1.5KW 3000RPM 6P 400V Motor (Key)
EM-AMFK2.2KW-4	2.2KW 3000RPM 6P 400V Motor (Key)
EM-AMFK3.7KW-4	3.7KW 3000RPM 6P 400V Motor (Key))
EM-AMFK5.5KW-4	5.5KW 3000RPM 6P 400V Motor (Key)
EM-AMFK7.5KW-4	7.5KW 3000RPM 6P 400V Motor (Key)

Model Number (With Brake and Keyway Shaft)	Description
EM-AMFBK0.4KW-4	0.4KW 3000RPM 4P 400V Brake Motor (Key)
EM-AMFBK0.75KW-4	0.75KW 3000RPM 4P 400V Brake Motor (Key)
EM-AMFBK1.5KW-4	1.5KW 3000RPM 6P 400V Brake Motor (Key)
EM-AMFBK2.2KW-4	2.2KW 3000RPM 6P 400V Brake Motor (Key)
EM-AMFBK3.7KW-4	3.7KW 3000RPM 6P 400V Brake Motor (Key)
EM-AMFBK5.5KW-4	5.5KW 3000RPM 6P 400V Brake Motor (Key)
EM-AMFBK7.5KW-4	7.5KW 3000RPM 6P 400V Brake Motor (Key)

Model Number (IP65 Rated)	Description
EM-AMFW0.4KW-4	0.4KW 3000RPM 4P 400V IP65 Motor
EM-AMFW0.75KW-4	0.75KW 3000RPM 4P 400V IP65 Motor
EM-AMFW1.5KW-4	1.5KW 3000RPM 6P 400V IP65 Motor
EM-AMFW2.2KW-4	2.2KW 3000RPM 6P 400V IP65 Motor
EM-AMFW3.7KW-4	3.7KW 3000RPM 6P 400V IP65 Motor
EM-AMFW5.5KW-4	5.5KW 3000RPM 6P 400V IP65 Motor
EM-AMFW7.5KW-4	7.5KW 3000RPM 6P 400V IP65 Motor

Model Number (IP65 Rated with Keyway Shaft)	Description
EM-AMFKW0.4KW-4	0.4KW 3000RPM 4P 400V IP65 Motor (Key)
EM-AMFKW0.75KW-4	0.75KW 3000RPM 4P 400V IP65 Motor (Key)
EM-AMFKW1.5KW-4	1.5KW 3000RPM 6P 400V IP65 Motor (Key)
EM-AMFKW2.2KW-4	2.2KW 3000RPM 6P 400V IP65 Motor (Key)
EM-AMFKW3.7KW-4	3.7KW 3000RPM 6P 400V IP65 Motor (Key)
EM-AMFKW5.5KW-4	5.5KW 3000RPM 6P 400V IP65 Motor (Key)
EM-AMFKW7.5KW-4	7.5KW 3000RPM 6P 400V IP65 Motor (Key)

Model Number (IP65 Rated with Brake)	Description
EM-AMFBW0.4KW-4	0.4KW 3000RPM 4P 400V IP65 Brake Motor
EM-AMFBW0.75KW-4	0.75KW 3000RPM 4P 400V IP65 Brake Motor
EM-AMFBW1.5KW-4	1.5KW 3000RPM 6P 400V IP65 Brake Motor
EM-AMFBW2.2KW-4	2.2KW 3000RPM 6P 400V IP65 Brake Motor
EM-AMFBW3.7KW-4	3.7KW 3000RPM 6P 400V IP65 Brake Motor
EM-AMFBW5.5KW-4	5.5KW 3000RPM 6P 400V IP65 Brake Motor
EM-AMFBW7.5KW-4	7.5KW 3000RPM 6P 400V IP65 Brake Motor

Model Number (IP65 Rated, Brake, Keyway Shaft)	Description
EM-AMFBKW0.4KW-4	0.4KW 3000R 4P 400V IP65 Brake Motor (Key)
EM-AMFBKW0.75KW-4	0.75KW 3000R 4P 400V IP65 Brake Motor (Key)
EM-AMFBKW1.5KW-4	1.5KW 3000R 6P 400V IP65 Brake Motor (Key)
EM-AMFBKW2.2KW-4	2.2KW 3000R 6P 400V IP65 Brake Motor (Key)
EM-AMFBKW3.7KW-4	3.7KW 3000R 6P 400V IP65 Brake Motor (Key)
EM-AMFBKW5.5KW-4	5.5KW 3000R 6P 400V IP65 Brake Motor (Key)
EM-AMFBKW7.5KW-4	7.5KW 3000R 6P 400V IP65 Brake Motor (Key)

Standard Specifications for EM-A Motor

Output (kW)		0.1	0.2	0.4	0.75	1.5	2.2	3.7	5.5	7.5
Rated Voltage (V)	200V Class	130	135	160	165	170	165	160	170	165
Rated Current (A)	200V Class	0.55	1.1	1.8	3.3	6.1	9.3	16.5	22.0	31.0
Rated Voltage (V)	400V Class	–	–	320	330	340	330	320	340	330
Rated Current (A)	400V Class	–	–	0.9	1.7	3.1	4.7	8.3	11.0	15.5
Motor Frame Number		50Fr		63Fr		71Fr		100Fr		
Flange Angle Size		□90		□110		□125		□176		
Number of Poles		4				6				
Insulation Class		130(B)						155(F)		
Rated Frequency (Hz)		100				150				
Rated Motor Rotation Speed (r/min)		3000								
Max. Motor Rotation Speed (r/min)		4000								
Motor Rated Torque (Nm)		0.32	0.64	1.27	2.39	4.78	7.00	11.8	17.5	23.9
Motor Max. Torque (%)		200 (*1)								
Positioning Accuracy (p/rev)		200 (*2)								
Rating		Continuous								
Allowable Output Shaft Overhang Load (N) (*3)		392		490		686		1470		
Allowable Output Shaft Thrust Load (N)		196		294		490		980		
Heat Resistance Class		130(B)						155(F)		
Moment of Inertia J ($\times 10^{-4}$ kg·m^2)	Without Brake	1.51	1.51	3.72	5.43	11.4	16.5	62.0	85.5	109
	With Brake	1.53	1.53	4.03	5.74	12.2	17.3	66.5	90.0	113.5
Recommended Moment of Load Inertia Ratio		10 times or less								
Enclosure Rating		Indoor type (IP44) (*4), Dust and waterproof type (IP65) (*4, *5)								
Enclosure Structure		Totally enclosed self-cooling type								
Ambient Temperature/Relative Humidity		0 to +40°C / RH 90% or less								
Altitude		Up to 1000 m above sea level								
Vibration		Constant 4.9 m/s^2, instantaneous 9.8 m/s^2 or less								
Brake Specifications		DC spring holding type (24 VDC) (Brake torque 150% or more/allowable number of braking operations 1000 times/mechanical life 1,000,000 times)								
Paint Color		Black (equivalent to Munsell N1.5)								
Weight (kg)	Without Brake	2.9	2.9	4.9	6.4	9.5	11.7	22	28	34
	With Brake	3.9	3.9	6.7	8.2	12.2	14.4	28	34	40

Notes:
1. Excluding single-phase input.
2. See the inverter instruction manual for wiring length requirements.
3. With load position at the center of the output shaft.
4. Excluding the part where the shaft passes through.
5. With EM-AMF _ _W

	Output (kW)		0.1	0.2	0.4	0.75	1.5	2.2	3.7	5.5	7.5
200V Class	Supported Inverter	Capacity (□K)	0.1	0.2	0.4	0.75	1.5	2.2	3.7	5.5	7.5
		FR-E820-□K (*1)	○	○	○	○	○	○	○	○	○
		FR-E820S-□K (*1)	○	○	○	○	○	○	—	—	—
		FR-E810W-□K (*1)	○	○	○	○	—	—	—	—	—
	Motor Rated Voltage (V)		130	135	160	165	170	165	160	170	165
	Motor Rated Current (A)		0.55	1.1	1.8	3.3	6.1	9.3	16.5	22	31

	Output (kW)		0.4	0.75	1.5	2.2	3.7	5.5	7.5
400V Class	Supported Inverter	Capacity (□K)	0.4	0.75	1.5	2.2	3.7	5.5	7.5
		FR-E840-□K (*1)	○	○	○	○	○	○	○
	Motor Rated Voltage (V)		320	330	340	330	320	340	330
	Motor Rated Current (A)		0.9	1.7	3.1	4.7	8.3	11	15.5

Note:
1. Be sure to perform initial setup of PM parameters (Pr.998) when using an EM-A motor for operation. See the inverter instruction manual for details.

Outline Dimensional Drawings (Common for 200V and 400V Class Models)

EM-AMF 0.1kW

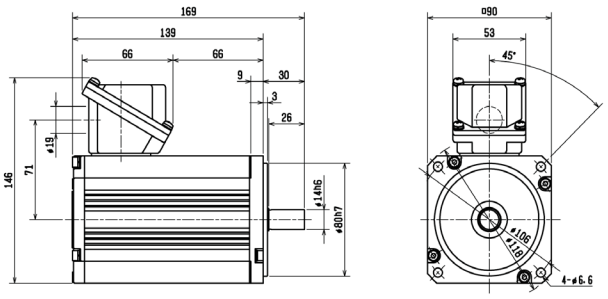

EM-AMF 0.2kW

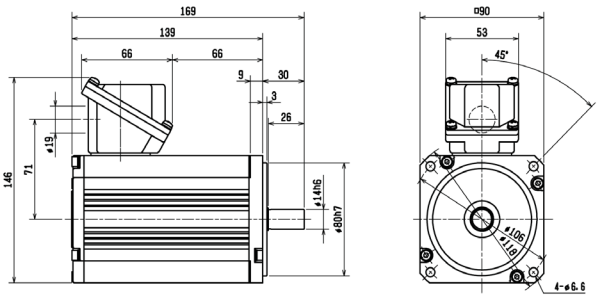

EM-AMF 0.4kW

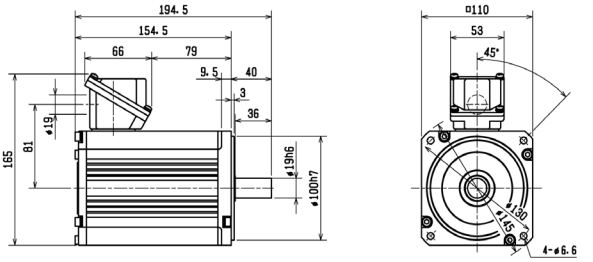

EM-AMF 0.75kW

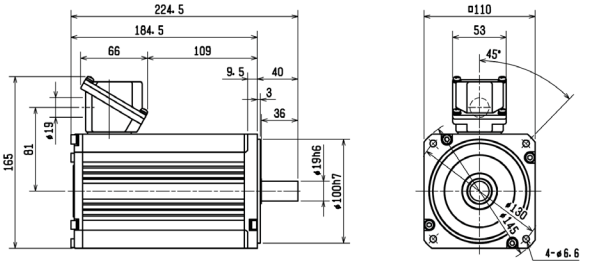

EM-AMF 1.5kW

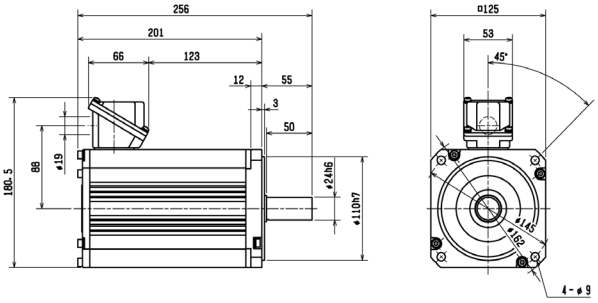

EM-AMF 2.2kW

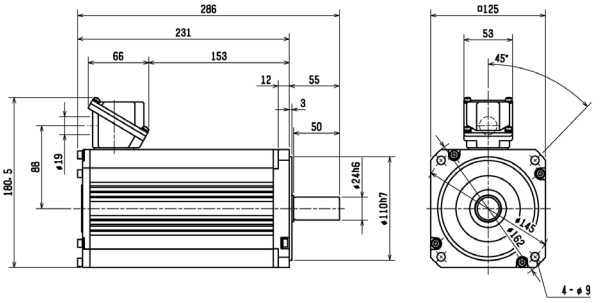

EM-AMF 3.7kW

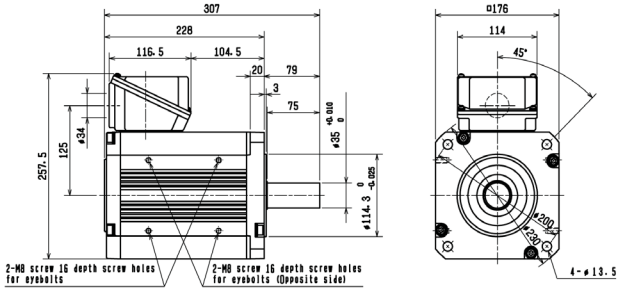

EM-AMF 5.5kW

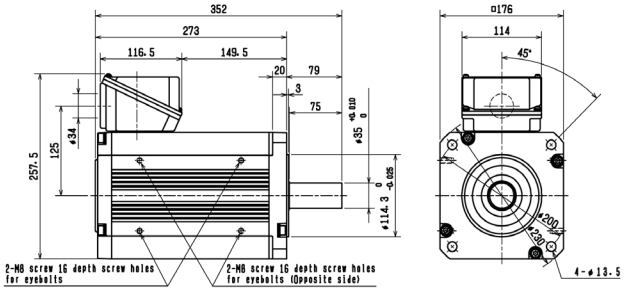

EM-AMF 7.5kW

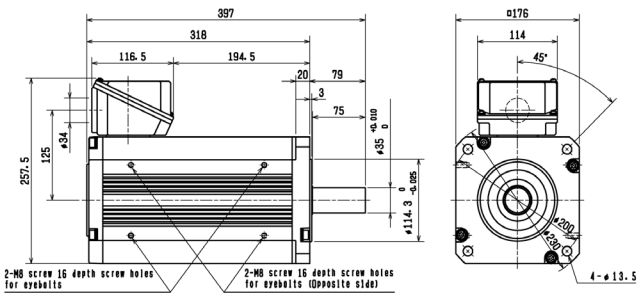

Outline Dimensional Drawings (Common for 200V and 400V Class Models)

EM-AMFB 0.1kW

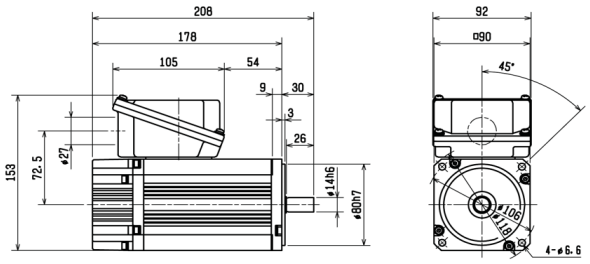

EM-AMFB 0.2kW

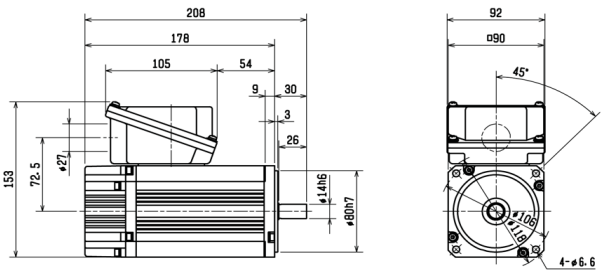

EM-AMFB 0.4kW

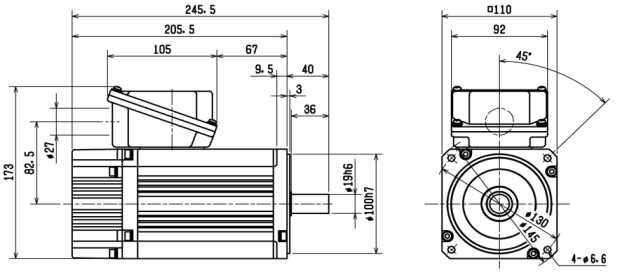

EM-AMFB 0.75kW

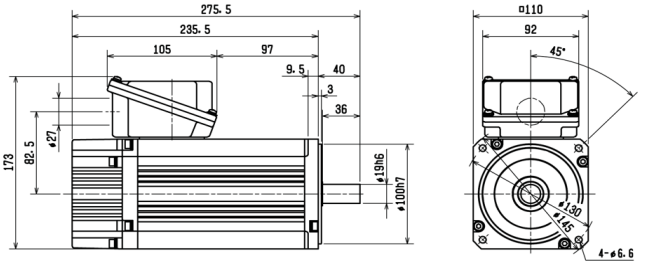

EM-AMFB 1.5kW

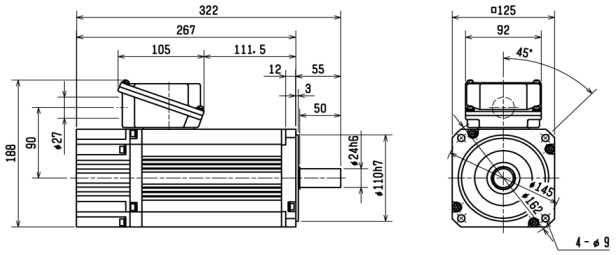

EM-AMFB 2.2kW

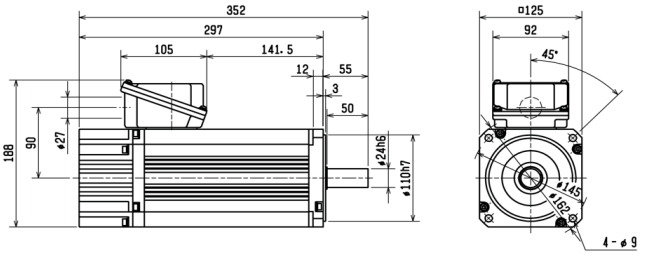

EM-AMFB 3.7kW

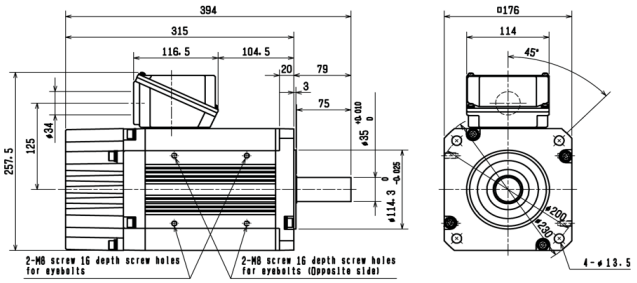

EM-AMFB 5.5kW

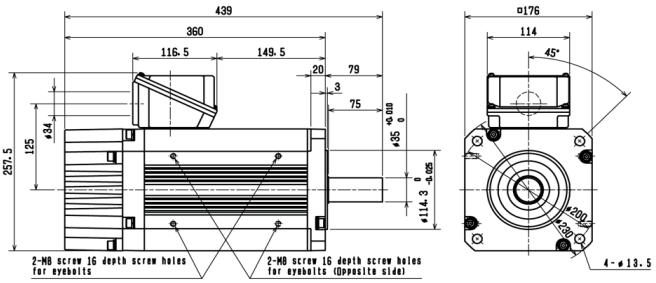

EM-AMFB 7.5kW

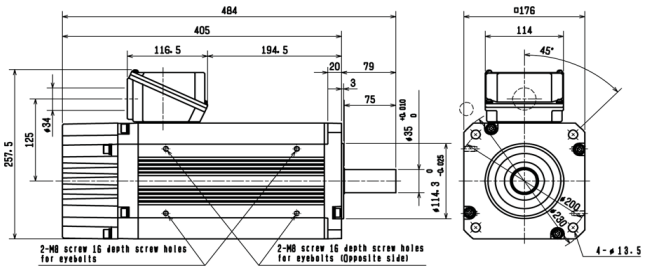

Motors: Micro MAX™ AC Inverter Duty Motor

1000:1 Constant Torque (TENV) • 20:1 Constant Torque (TEFC)

Designed for direct replacement of PMDC or any other variable speed application where up to a 1000:1 constant torque speed range is required. Typical uses include: machine tools, conveyors, packaging machines, batching machines and printing equipment.

- Replaces 90 and 180 volt PMDC motors when used with AC variable frequency drives
- Constant torque operation from 0 to base speed (TENV ratings)
- Constant torque operation from 1/20 speed to base speed (TEFC ratings)
- Constant horsepower to twice base speed (RPM)
- Class H insulation with CR200 magnetic wire
- Continuous duty at 40°C ambient
- "Quick Connect" terminal board as noted
- Top mounted conduit box with pigtail leads (TEFC and 1.5Hp TENV)
- UL recognized and CSA certified
- Three-year warranty

C-Face with Rigid Base

Hp	RPM	Volts	Encl.	Frame	Catalog No.	F.L.A.	Weight	Notes
1/8	1800	230	TENV	56C	Y605 *	1.0	18	N, Q
1/4	1800	230	TENV	56C	Y500 *	1.0	18	N, Q
1/3	1800	230	TENV	56C	Y502 *	1.2	18	N, Q
1/2	1800	230	TENV	56C	Y504 *	1.8	20	N, Q
	1800	230/460	TENV	56C	Y360 *	1.8/0.9	20	N
	1800	575	TENV	56C	Y361 *	0.7	20	N, Q
3/4	1800	230	TEFC	56C	Y506 *	2.8	23	-
	1800	230/460	TEFC	56C	Y362 *	2.8/1.4	23	-
	1800	575	TEFC	56C	Y363	1.1	23	-
1	1800	230	TEFC	56C	Y508 *	3.2	28	-
	1800	230/460	TEFC	56C	Y364 *	3.2/1.6	28	-
	1800	575	TEFC	56C	Y365 *	1.3	28	-
1 1/2	1800	230	TENV	145TC	Y522 *	4.8	49	N, 6
	1800	230/460	TENV	145TC	Y366 *	4.8/2.4	49	N, 6
	1800	575	TENV	145TC	Y367 *	1.9	49	N, 6
2	1800	230	TEFC	145TC	Y523 *	5.8	50	6
	1800	230/460	TEFC	145TC	Y368 *	5.8/2.9	50	6
	1800	575	TEFC	145TC	Y369 *	2.3	50	6
3	1800	230	TEFC	182TC	Y998	8.4	70	-
	1800	230/460	TEFC	182TC	Y999 *	8.4/4.2	70	-
	1800	575	TEFC	182TC	Y270	3.5	70	-
5	1800	230/460	TEFC	184TC	Y372 *	13.4/6.7	88	6
	1800	575	TEFC	184TC	Y373	5.4	88	6
7 1/2	1800	230/460	TEFC	213TC	Y994 *	21.4/10.7	125	-
	1800	575	TEFC	213TC	Y995	8.5	125	-
10	1800	230/460	TEFC	215TC	Y996 *	28.0/14.0	135	-
	1800	575	TEFC	215TC	Y997	11.2	135	-

General Notes:
* Marathon Motors stock item.
For additional information visit www.marathonelectric.com/motors/search.asp

C-Face Footless

Hp	RPM	Volts	Encl.	Frame	Catalog No.	F.L.A.	Weight	Notes
1/8	1800	230	TENV	56C	Y606 *	1.0	17	N, Q
1/4	1800	230	TENV	56C	Y501 *	1.0	17	N, Q
1/3	1800	230	TENV	56C	Y503 *	1.2	17	N, Q
1/2	1800	230	TENV	56C	Y505 *	1.8	19	N, Q
	1800	230/460	TENV	56C	Y374 *	1.8/0.9	19	N
	1800	575	TENV	56C	Y375 *	0.7	19	N, Q
3/4	1800	230	TEFC	56C	Y507 *	2.8	23	
	1800	230/460	TEFC	56C	Y376 *	2.8/1.4	23	
	1800	575	TEFC	56C	Y377	1.1	23	
1	1800	230	TEFC	56C	Y521 *	3.2	27	
	1800	230/460	TEFC	56C	Y378 *	3.2/1.6	27	
	1800	575	TEFC	56C	Y379 *	1.3	27	

General Notes:
* Marathon Motors stock item.
N: Totally Enclosed Non Ventilated; Q: "Quick Connect" terminal board; 6: Bolt-on, removable base for footless mounting option.
For additional information visit www.marathonelectric.com/motors/search.asp

Motors: Black MAX™ Vector Duty

1000:1 Constant Torque

Designed for inverter or vector duty applications where up to a 1000:1 constant torque speed range is required. Typical uses include: material handling, machine tools, conveyors, crane & hoist, metal processing and other industrial machinery installed in dusty or dirty environments.

- Class F MAX GUARD insulation system
- Constant torque operation from 0 to base speed on vector drive
- Constant horsepower to twice base speed (RPM)
- Continuous duty at 40°C ambient
- Optimized for operation with IGBT inverter (NEMA Design A)
- Class F N/C thermostats
- Ball bearing
- Removable Base on some models as noted
- F1 standard, field reversible to F2 (except where noted)
- Encoder and brake provisions included on opposite drive end (maximum 10 lb-ft brake)
- UL recognized and CSA certified
- Three-year warranty

Totally Enclosed Non-Ventilated, C-Face with Rigid Base

Hp	RPM	Volts	Frame	Catalog No.	F.L.A.	Weight	Notes
1/4	1800	230/460	56C	Y592 *	1.2/0.6	19	N, S, 13
1/2	1800	230/460	56C	Y534 *	1.6/0.8	28	N, S, 6, 13
	1800	575	56C	Y555 *	0.6	28	N, S, 6, 13
1	1800	230/460	56C	Y535 *	3.0/1.5	39	N, S, 6, 13
	1800	575	56C	Y556 *	1.2	40	N, S, 6, 13
	1800	230/460	143TC	Y536 *	3.0/1.5	43	N, S, 6, 13
	1200	230/460	145TC	Y537 *	3.8/1.9	49	N, S, 6, 13
1 1/2	1800	230/460	145TC	Y538 *	4.8/2.4	50	N, S, 6, 13
2	1800	230/460	145TC	Y551 *	6.0/3.0	70	N
	1800	575	145TC	Y557 *	2.4	70	N
	1200	230/460	184TC	Y540 *	6.6/3.3	88	N, AL
3	1800	230/460	182TC	Y541 *	8.4/4.2	93	N, AL
	1800	575	182TC	Y558 *	3.4	98	N, AL
	1200	230/460	213TC	Y542 *	9.4/4.7	118	N, AL
5	1800	230/460	184TC	Y543 *	14.0/7.0	103	N, AL
	1800	575	184TC	Y559 *	5.4	103	N, AL
	1200	230/460	215TC	Y544 *	15.4/7.7	128	N, AL
7 1/2	1800	230/460	213TC	Y545 *	21.0/10.5	146	N, AL
	1800	575	213TC	Y560 *	8.4	150	N, AL
	1200	230/460	254TC	Y546 *	22.0/11.0	209	N, AL
10	1800	230/460	215TC	Y547 *	27.0/13.5	159	N, AL
	1800	575	215TC	Y561 *	10.8	159	N, AL
	1200	230/460	256TC	Y548 *	28.0/14.0	275	N, AL
15	1800	230/460	254TC	Y549 *	40.0/20.0	250	N, AL, I
	1800	575	254TC	Y562 *	16.0	250	N, AL, I
20	1800	230/460	256TC	Y552 *	50.0/25.0	320	N, I
	1800	575	256TC	Y563 *	20.0	320	N, I
25	1800	230/460	284TC	Y553 *	62.0/31.0	525	N, I
	1800	575	284TC	Y567 *	24.8	525	N, I
30	1800	230/460	286TC	Y393 *	80.0/40.0	575	N, I

General Notes:
* Marathon Motors stock item. Shaded areas are cast iron frames.
AL: Aluminum Frame Construction; N: Totally Enclosed Non-Ventilated; I: Intermittent duty from 90-120Hz operation; S: Steel Frame Construction; 6: Bolt-on, removable base for footless mounting option; 13: F1 Mounting only, cannot modify to F2.
For additional information visit www.marathonelectric.com/motors/search.asp

Black MAX™ Vector Duty: Encoders through Mod Center

Brand	Model	PPR	Catalog No.	Notes
Avtron	HS25A	1024	A746*	Optical Hollow Shaft, MS connector
		2048	A747*	
	HS35A	1024	A736*	Optical Hollow Shaft, MS connector
		2048	A739*	
	HS35M	1024	A742*	Magnetic Hollow Shaft, EPIC connector
		2048	A744	
	M3	1024	A753*	Optical Hollow Shaft, EPIC connector
	M56	1024	A793*	Magnetic Modular Style, EPIC connector
Dynapar	HS35	1024	A772*	Shaft mount, 5-26VDC, with 10 pin connector
		2048	A776*	
BEI	HS35	1024	A779*	Shaft mount, 5-26VDC, with 10 pin connector
		2048	A780*	

General Notes:
* Marathon Motors stock item.
For additional information visit www.marathonelectric.com/motors/search.asp

Motors: Blue MAX™ 2000 Vector Duty

2000:1 Constant Torque

Designed for inverter or vector duty applications where up to a 2000:1 constant torque speed range is required. Typical uses include: material handling, machine tools, conveyors, crane & hoist, metal processing, test stands, pumps, compressors, textile processing and other industrial machinery installed in dusty or dirty environments where cast iron construction is required.

- Class H MAX GUARD insulation system
- Constant torque operation from 0 to base speed on vector drive, including TEFC (on V/Hz drives, TEFC motors are limited to 20:1 Constant Torque)
- Constant horsepower to twice base speed (143-254 frame); 1.5 times base (all others)
- Continuous duty at 40°C ambient
- Optimized for operation with IGBT inverter (NEMA Design A)
- C-Face foot mount through 100 Hp as noted
- Class F N/C thermostats
- Ball bearing (roller bearing available 360 frame and larger)
- Cast iron frame and brackets
- Patented “fracket” design (TEBC enclosure)
- “B” temperature rise on Blower-Cooled motors
- F1 standard, field reversible to F2
- Encoder and brake provisions included on opposite drive end
- UL recognized and CSA certified
- Three-year warranty

Totally Enclosed Rigid Base, and C-Face with Rigid Base

Hp	RPM	Volts	Encl.	Frame	Catalog No.	F.L.A.	Weight	Notes
1	1800	230/460	TENV	143TC	Y525 *	3.0/1.5	61	NEMA Design B
1 1/2	1800	230/460	TENV	145TC	Y590 *	4.6/2.3	68	
2	1800	230/460	TENV	145TC	Y526 *	6.0/3.0	70	
3	1800	230/460	TENV	182TC	Y527 *	8.0/4.0	110	
5	1800	230/460	TENV	184TC	Y564 *	13.4/6.7	117	NEMA Design B
7 1/2	1800	230/460	TEFC	213TC	Y595 *	19.4/9.7	191	
	1800	230/460	TENV	213TC	Y565 *	21.0/10.5	180	
10	1800	230/460	TEFC	215TC	Y596 *	25.4/12.7	211	
	1800	230/460	TENV	215TC	Y566 *	26.0/13.0	290	
15	1800	230/460	TEFC	254TC	Y597 *	37.0/18.5	339	
	1800	230/460	TENV	254TC	Y509 *	40.4/20.2	350	
	1200	230/460	TEBC	284TC	Y395 *	40.0/20.0	480	
20	1800	230/460	TEFC	256TC	Y598 *	52.0/26.0	375	
	1800	230/460	TENV	256TC	Y510 *	50.0/25.0	380	
	1200	230/460	TEBC	286TC	Y582	52.4/26.2	500	NEMA Design B
25	1800	230/460	TEFC	284T	Y569 *	63.0/31.5	492	
	1800	230/460	TEBC	284TC	Y511 *	63.0/31.5	500	
	1200	230/460	TEBC	324TC	Y583 *	67.0/33.5	620	NEMA Design B
30	1800	230/460	TEFC	286T	Y570 *	77.0/38.5	594	
	1800	230/460	TEBC	286TC	Y512 *	74.0/37.0	520	
	1200	230/460	TEBC	326TC	Y584 *	82.0/41.0	686	NEMA Design B
40	1800	230/460	TEFC	324T	Y571 *	100/50.0	540	
	1800	230/460	TEBC	324TC	Y513 *	100/50.0	620	
	1200	230/460	TEBC	364TC	Y585 *	104/52.0	1050	
50	1800	230/460	TEFC	326T	Y572 *	121/60.5	540	
	1800	230/460	TEBC	326TC	Y514 *	120/60.0	640	
	1200	230/460	TEBC	365TC	Y586	130/65.0	1100	
60	1800	230/460	TEFC	364T	Y573 *	147/73.5	965	
	1800	230/460	TEBC	364TC	Y515 *	147/73.5	1062	
	1200	230/460	TEBC	404TC	Y587 *	142/71.0	1380	
75	1800	230/460	TEFC	365T	Y574 *	184/92.0	1006	
	1800	230/460	TEBC	365TC	Y516 *	180/90.0	1106	
	1200	230/460	TEBC	405TC	Y588 *	180/90.0	1450	NEMA Design B
100	1800	230/460	TEFC	405T	Y575 *	230/115	1308	
	1800	230/460	TEBV	405TC	Y517 *	230/115	1429	
	1200	230/460	TEBC	444TC	Y589 *	250/125	2150	
125	1800	460	TEFC	444T	Y576 *	143	2062	
	1800	460	TEBC	444T	Y518 *	138	2110	NEMA Design B
150	1800	460	TEFC	445T	Y577 *	170	2246	
	1800	460	TEBC	445T	Y519 *	170	2321	
200	1800	460	TEFC	445T	Y578 *	230	2404	
	1800	460	TEBC	445T	Y520 *	230	2457	
250	1800	460	TEFC	449T	Y579	295	2800	
	1800	460	TEBC	449T	Y531 *	295	2880	
300	1800	460	TEFC	449T	Y580	330	2890	20:1
	1800	460	TEBC	449T	Y532 *	327	2950	
350	1800	460	TEBC	449T	Y533 *	385	3075	

General Notes:
* Marathon Motors stock item.
B: NEMA Design B.
For additional information visit www.marathonelectric.com/motors/search.asp

Blue MAX™ 2000 Vector Duty / Encoders Through Mod Center

Encl.	Brand	Model	PPR	Catalog No.	Notes
TENV	Avtron	HS25A	1024	A746*	Optical Hollow Shaft, MS connector
			2048	A747*	
		HS35A	1024	A736*	Optical Hollow Shaft, MS connector
			2048	A739*	
		HS35M	1024	A742*	Magnetic Hollow Shaft, EPIC connector
			2048	A744	
		M3	1024	A753*	Optical Hollow Shaft, EPIC connector
		M56	1024	A793*	Magnetic Modular Style, EPIC connector
	Dynapar	HS35	1024	A772*	Shaft mount, 5-26VDC, with 10 pin connector
			2048	A776*	
	BEI	HS35	1024	A779*	Shaft mount, 5-26VDC, with 10 pin connector
			2048	A780*	
TEFC	Avtron	HS35A	1024	A737*	Optical Hollow Shaft, MS connector
			2048	A740	
		HS35M	1024	A742*	Magnetic Hollow Shaft, EPIC connector
			2048	A744	
		M3	1024	A754*	Optical Hollow Shaft, EPIC connector
	Dynapar	HS35	1024	A774*	Shaft mount, 5-26VDC, with 10 pin connector
			2048	A777*	
	BEI	HS35	1024	A783*	Shaft mount, 5-26VDC, with 10 pin connector
			2048	A784*	
TEBC	Avtron	HS35A	1024	A738*	Optical Hollow Shaft, MS connector
			2048	A741*	
		HS35M	1024	A743*	Magnetic Hollow Shaft, EPIC connector
			2048	A745	
		M56	1024	A794*	Magnetic Modular Style, EPIC connector
	Dynapar	HS35	1024	A775*	Shaft mount, 5-26VDC, with 10 pin connector
			2048	A778*	
	BEI	HS35	1024	A781*	Shaft mount, 5-26VDC, with 10 pin connector
			2048	A782*	
	-	-	-	A801*	Encoder Conduit box

General Notes:
* Marathon Motors stock item.
For additional information visit www.marathonelectric.com/motors/search.asp

Motors: SyMAX Internal Permanent Magnet Motors

1000:1 Constant Torque

Designed for inverter duty applications including compressors, pumping, material handling, mixers, air moving, commercial and industrial machinery and other applications requiring a mission critical motor.

SyMAX® PMAC Performance

- Ultra-Efficient™ - Exceeds NEMA PremiumR, meets or exceeds IE4
- High Power Factor (on VFD power)
- Ultra-Precision balance to < 0.08 in/sec vibration
- Sound levels exceed requirements in IEEE841 specification
- Low operating temperature
- Concentrated winding stator reduces dV/dT stresses
- Low cogging torque
- Optimized Back EMF
- Full torque at zero speed (Infinity:1)

HP	RPM	VOLTS	ENCL	FRAME	Catalog No. (*1)	F.L.A	Weight	Notes
0.5	1800	230/460	TENV	56C	SY001	1.86/0.93	13	TEFC Optional
1.0	1800	230/460	TENV	56C	SY003	355./1.78	18	TEFC Optional
1.5	1800	230/460	TENV	56C	SY004	5.48/2.74	23	TEFC Optional
2	1800	230/460	TENV	56C	SY005	6.32/3.16	28	TEFC Optional
3	1800	460	TEFC	182TC	SY006A	3.8	99	TENV Optional
5	1800	460	TEFC	184TC	SY007A	6.4	108	TENV Optional
7.5	1800	460	TEFC	213TC	SY008A	9.4	152	TENV Optional
10	1800	460	TEFC	215TC	SY009A	11.8	166	TENV Optional
15	1800	460	TEFC	254TC	SY010	18.5	204	TENV or TEBC Optional
20	1800	460	TEFC	256TC	SY011	22.9	253	TENV or TEBC Optional
25	1800	460	TEFC	284TC	SY012	28.1	396	TENV or TEBC Optional
30	1800	460	TEFC	286TC	SY013	33.7	416	TENV or TEBC Optional

Note 1: Marathon Motors stock item.