

UNIVERSAL ROBOTS

UR20

Technical Specification

The UR20, the first of our next-generation high performance cobots, has been redesigned from the ground up to provide up to 30% more speed and torque, advanced motion control capabilities, and first-class user experience.

UR cobots bring incredible versatility and unparalleled ease of use to your applications. The UR20 is no exception - its 20 kg payload and 1750 mm reach make it an ideal match for applications ranging from palletizing to machine loading.

2nd Edition Published January 2023.
Preliminary Specification. Subject to change.

UR20

Specification

Payload	20 kg (44,1 lbs) at full CoG offset and in the entire workspace
Reach	1750 mm (68,9 in)
Degrees of freedom	6 rotating joints
Programming	12 inch touchscreen with PolyScope graphical user interface
Power consumption (average)	
Maximum power	750 W
Moderate operating settings	500 W
Safety	17 configurable safety functions
Certifications	EN ISO 13849-1, PLd Category 3, and EN ISO 10218-1

Performance

Force Sensing, Tool Flange	**Force, x-y-z**	**Torque, x-y-z**
Reach	200 N	20,0 Nm
Precision	5,5 N	0,2 Nm
Accuracy	10 N	1 Nm

Movement

Pose Repeatability per ISO 9283	± 0,05 mm

Axis movement	**Working range**	**Maximum speed**
Base	± 360°	± 120˚/s
Shoulder	± 360°	± 120˚/s
Elbow	± 360°	± 150˚/s
Wrist 1	± 360°	± 210˚/s
Wrist 2	± 360°	± 210˚/s
Wrist 3	± 360°	± 210˚/s

Features

IP classification	IP54
ISO 14644-1 class cleanroom	5
Noise	> 65 dB(A)
Robot mounting	Any orientation
I/O Ports	
Digital In	2
Digital Out	2
Analog In	2
Tool I/O power supply voltage	12/24 V
Tool I/O power supply	2 A (Dual pin), 1 A (Single pin)

Physical

Footprint	Ø 245 mm 6 x M10 60° 105 mm center
Materials	Aluminum, plastic, steel
Tool Flange	EN ISO-9409-1-80-6-M8
Connector type	M8 | M8 8-pin
Cable lenght (robot arm)	6 m (236 in)
Weight including cable	64 kg (141,1 lbs)
Operating temperature range***	0-50°C (32-122°F)
	90% RH (non-condensing)

Automation, Inc.
800-706-4775
info@automationinc.com
www.automationinc.com

3-Position Enabling Teach Pendant

Features

IP classification	IP54
Included in certifications	EN ISO 10218-1 EN ISO 13849-1
Humidity	90% RH (non-condensing)
Display resolution	1280 x 800 pixels

Physical

Materials	Plastic
Teach Pendant size (W x H x D)	300 mm x 231 mm x 50 mm (11,8 in x 9,1 in x 1,97 in)
Weight	1,8 kg (3,961 lbs) including 1 m of teach pendant cable
Cable length	4,5 m (177,17 in)

Control Box

Features

IP Classification	IP44
ISO 14644-1 class cleanroom	6
Operating temperature range*	0-50°C (32-122°F)
Humidity	90% RH (non-condensing)
I/O Ports	
Digital In	16
Digital Out	16
Analog In	2
Analog Out	2
Quadrature Digital Inputs	4
I/O Power Supply	24V, 2A
Communication	Modbus TCP PROFINET Ethernet/IP USB 2.0, USB 3.0
Power Source	100-240 VAC, 47-440 Hz

**Speeds might be derated at temperatures above 35w depended on program tact time.*

Physical

Control Box Size (W x H x D)	460 mm x 449 mm x 254 mm (18,2 in x 17,6 in x 10 in)
Weight	12 kg (26,5 lbs)
Materials	Powder coated steel

The control box is also available in an OEM version

UR20 payload curve

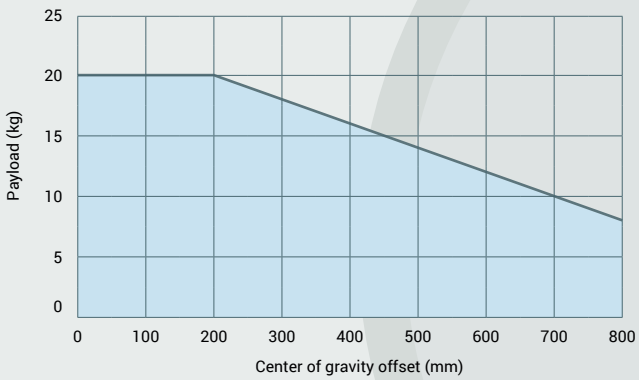

Recommended hole pattern for robot base

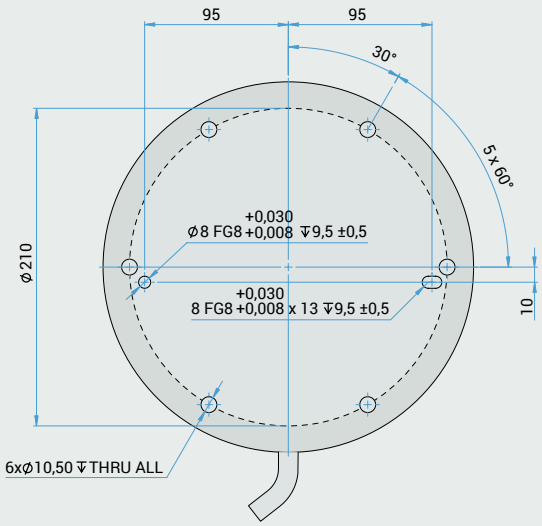

Mounting plate with pins for robot base

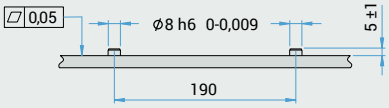

UR20 tool flange

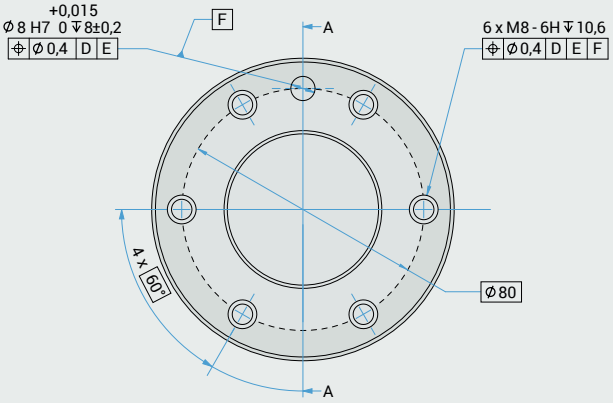

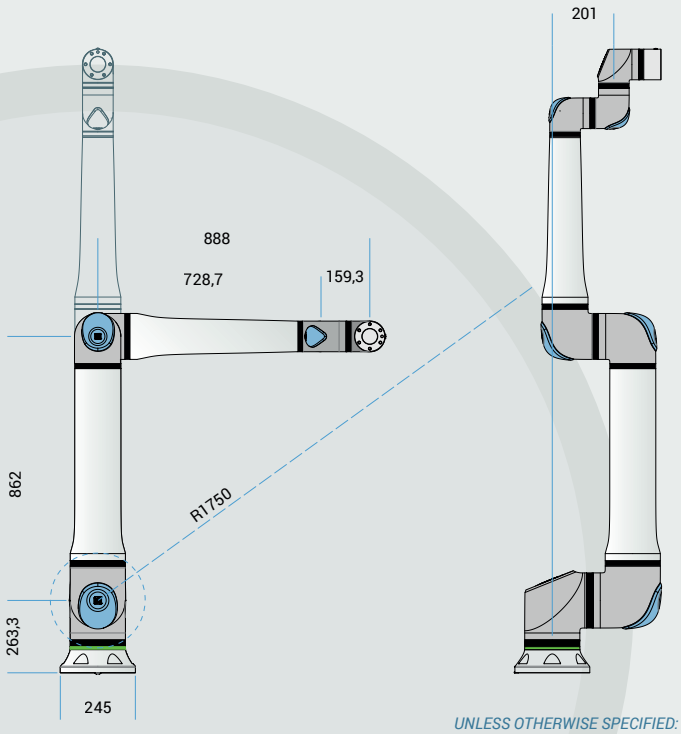

UNLESS OTHERWISE SPECIFIED:
Dimensions are in millimeters. Tolerance ± 0,1 mm ± 0,5°